# PACE PNEUMATICS

真诚打造信誉·追求更高品位

Create Sincere Credit, Go In For Higher Level

## PNEUMATIC COMPONENTS

Afford Reassurance Products, Keep Excellent Service

宁波佩斯气动有限公司

NINGBO PACE PNEUMATICS CO.,LTD.

# 目录Contents

电磁阀
Solenoid

B


B-01 4V100系列电磁阀、气控阀
4V100 Series Solenoid Valve, Pneumatic Control Valve

B-05 4V200系列电磁阀、气控阀
4V200 Series Solenoid Valve, Pneumatic Control Valve

B-10 4V300系列电磁阀、气控阀
4V300 Series Solenoid Valve, Pneumatic Control Valve

B-14 4V400系列电磁阀、气控阀
4V400 Series Solenoid Valve, Pneumatic Control Valve

B-16 100-400系列底座
100 - 400 Series Base

B-17 3V1系列电磁阀
3V1 Series Solenoid Valve

B-18 VF、VZ系列电磁阀
VF,VZ Series Solenoid Valve

B-21 MSVD-600系列电磁阀
MSVD-600 Series Solenoid Valve

B-23 2W(UD)系列电磁阀
2W (UD) Series Solenoid Valve

B-24 2W(UW)系列电磁阀(大口径)
2W (UW) Series Solenoid Valve (Large Aperture)

B-26 2L(US)系列电磁阀
2L(US) Series Solenoid Valve

B-28 PU系列电磁阀
PU Series Solenoid Valve

B-29 二位二通活塞式多介质角座阀系列
2/2 way Piston-operated Angle-seat Valves for Neutral and Aggressive Liquids and Gases

B-31 MOV系列机械阀
MOV Series Mechanical valve

B-32 JM系列机械阀
JM Series Mechanical Valve

# 目 录Contents


B-33 MSV系列机械阀
MSV Series Mechanical Valve

B-35 脚 踏 阀
Foot Valve

B-38 手 扳 阀
Hand Level Valve

B-41 手 转 阀
Hand-switching Valve

B-42 手 拉 阀
Hand-draw Valve

B-43 MV系列手滑阀
MV Series Hand Sliding Valve

B-44 KA系列单向阀
KA Series Check Valve

B-45 梭 阀
Shuttle Valve

B-46 快速排气阀
Quick Exhaust Valve

B-47 AQ系列快速排气阀
AQ Series Quick Exhaust Valve

B-47 XQ系列快速排气阀
XQ Series Quick Exhaust Valve

B-48 KLA系列单向节流阀
KLA Series Flow control valve

B-50 流量控制阀
ASC series Flow Control Valve

B-52 2V系列二位二通电磁阀
2V Series Two-position Two-way Solenoid Valve

B-54 2Q系列气控二通阀
2Q Series Air Control Two-Way Valve

B-55 VX系列二位二通电磁阀
VX Series Two-position Two-way Solenoid Valve

B-56 Q22HD系列流体气控制阀
Q22HD Series Fluid Air Control Valve

# 4V100系列电磁阀、气控阀
4V100 Series Solenoid Valve, Pneumatic Control Valve

## 订购码 | Ordering Code

| 4V | 1 | 10 | – | 06 | B | AC220V | – | W |
|---|---|---|---|---|---|---|---|---|

规格代码
4V:二(三)位五通电磁阀
4A:二(三)位五通气控阀
3V:二位三通电磁阀
3A:二位三通气控阀
**Model**
4V:Two (Three)-position Five-way Solenoid Valve
4A:Two (Three)-position Five-way Pneumatic Control Valve
3V:Two-position Three-way Solenoid Valve
3A:Two-position Three-way Pneumatic Control Valve

系列代码
100系列
**Body size**
100 Series

线圈及位数
10:单头双位置
20:双头双位置
30C:双头三位置封闭型
30E:双头三位置排气型
30P:双头三位置压力型
**Coil and Places**
10:Single-head Double-position
20:Double-head Double-position
30C:Double-head Three-position Close Type
30E:Double-head Three-position Exhaust Type
30P:Double-head Three-position Pressure Type

接管口径
**Port size**
M5: M5X0.8
06: 1/8″

接管形式及初始状态
空白:管接式
B:二位五通板接式
三位五通板接式
NC:二位三通常闭型
NO:二位三通常开型
**Joint Pipe Form and Initial State**
Blank:Pipe Connection Type
B:Two-position Five-way Plate Connection Type
Three-position Five-way Plate Connection Type
NC:Two-position Three-way Normal Close Type
NO:Two-position Three-way Normal Open Type

标准电压
**Standard Voltage**
DC12V
DC24V
AC24V 50Hz/60Hz
AC110V 50Hz/60Hz
AC220V 50Hz/60Hz
AC380V 50Hz/60Hz

接线形式
空白：标准端子式
LD:茶色带灯端子式
LD1:白色带灯端子式
W:引线式
**Wiring Form**
Blank:standard Connector
LD:Brown with Lighting Connector
LD1:White with Lighting Connector
W: Lead Wire Type

## 规格 | Specification

| 型 号 Model | 4V110-M5 4A110-M5 | 4V120-M5 4A120-M5 | 4V130C-M5 4A130C-M5 | 4V130E-M5 4A130E-M5 | 4V130P-M5 4A130P-M5 | 4V110-06 4A110-06 | 4V120-06 4A120-06 | 4V130C-06 4A130C-06 | 4V130E-06 4A130E-06 | 4V130P-06 4A130P-06 |
|---|---|---|---|---|---|---|---|---|---|---|
| 位通数 Position and Way NO. | 二位五通 Two-position Five-way | | 三位五通 Three-position Five-way | | | 二位五通 Two-position Five-way | | 三位五通 Three-position Five-way | | |
| 有效截面积 Effective Sectional Area | 10mm²(CV=0.56) | | 7mm²(CV=0.40) | | | 12mm²(CV=0.67) | | 9mm²(CV=0.5) | | |
| 型 号 Model | 3V110-M5 | 3V120-M5 | 3A110-M5 | 3A120-M5 | | 3V110-06 | 3V120-06 | 3A110-06 | 3A120-06 | |
| 位通数 Position and Way NO. | 二位三通 Two-position Three-way | | | | | 二位三通 Two-position Three-way | | | | |
| 有效截面积 Effective Section Area | 10mm²(CV=0.56) | | | | | 12mm²(CV=0.67) | | | | |
| 接管口径 Joint Pipe Bore | 进气＝出气＝排气＝M5×0.8 Air Inlet=Air Outlet=Exhaust=M5×0.8 | | | | | 进气＝出气＝排气＝G1/8 Air Inlet=Air Outlet=Exhaust=G1/8 | | | | |
| 工作介质 Working Medium | 经40微米过滤的空气 40 Micron Filtered Air | | | | | | | | | |
| 动作方式 Motion Pattern | 内部先导式 Inner Guide Type | | | | | | | | | |
| 使用压力 Working-pressure | 0.15~0.8MPa | | | | | | | | | |
| 最大耐压力 Max. Pressure Resistance | 1.2MPa | | | | | | | | | |
| 工作温度 Operating Temperature | 5~50℃ | | | | | | | | | |
| 电压范围 Voltage Range | ±10% | | | | | | | | | |
| 耗电量 Power Consumption | AC: 2.5VA DC: 2.5W | | | | | | | | | |
| 绝缘性及防护等级 Insulation & Protection Class | F级. IP65 F Class. IP65 | | | | | | | | | |
| 接线形式 Wiring Form | 出线式或端子式 Lead Wire or Connector type | | | | | | | | | |
| 最高动作频率 Highest Action Frequency | 每秒五次 5 Cycle / Sec | | | | | | | | | |
| 最短励磁时间 Shortest Excitation Time | 0.05秒 0.05 Second | | | | | | | | | |

# 4V100系列电磁阀、气控阀
4V100 Series Solenoid Valve, Pneumatic Control Valve

## 外形尺寸 | Overall Dimension

### 4V110-M5

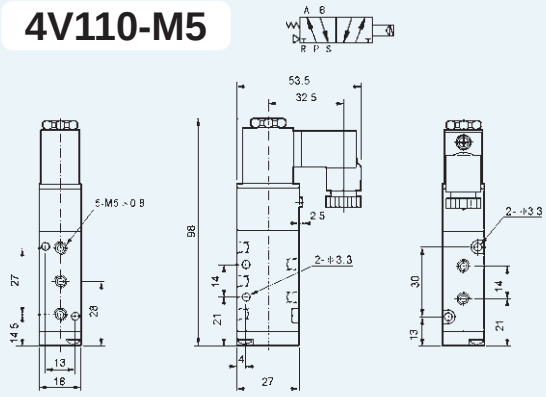


### 4V110-06

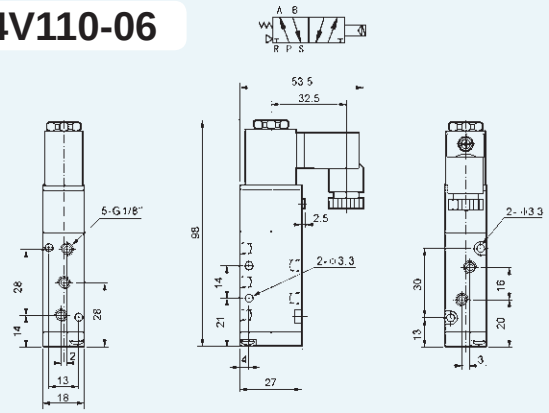


### 4V120-M5

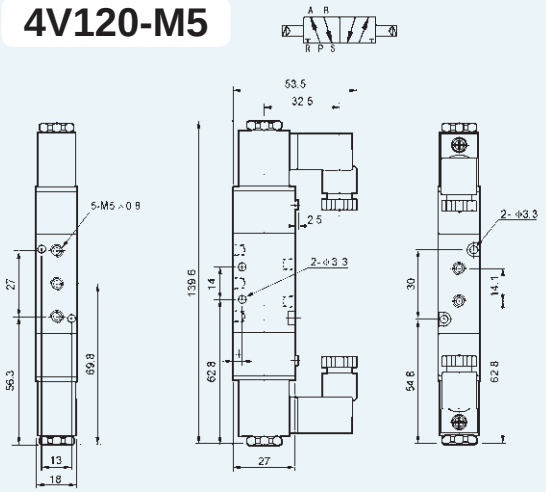


### 4V120-06

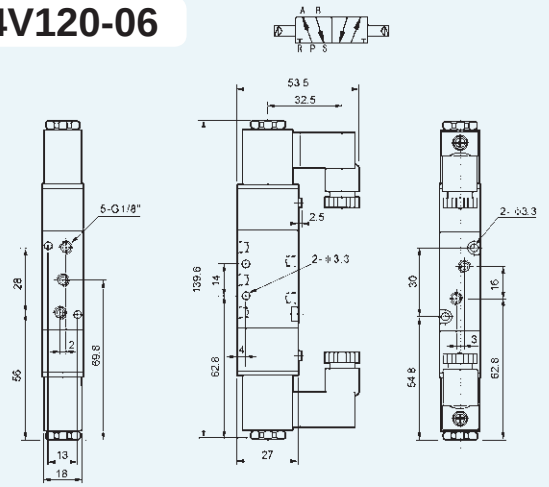


### 4V130-M5

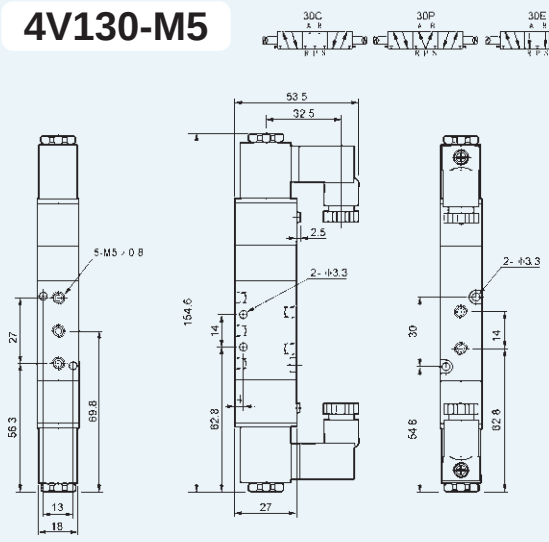


### 4V130-06

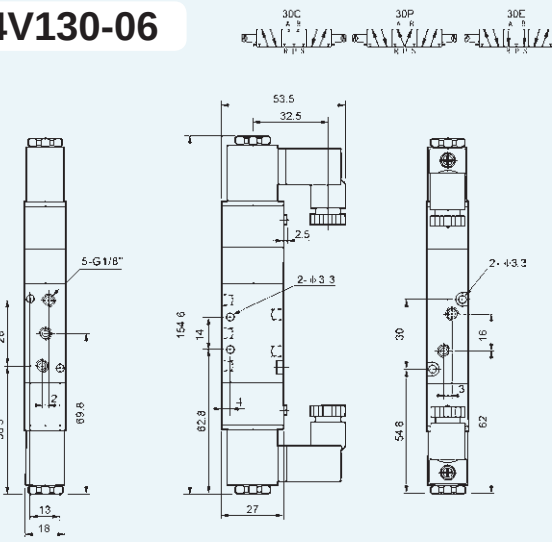

# 4V100系列电磁阀、气控阀
4V100 Series Solenoid Valve, Pneumatic Control Valve

## 外形尺寸 | Overall Dimension

### 4A110-M5

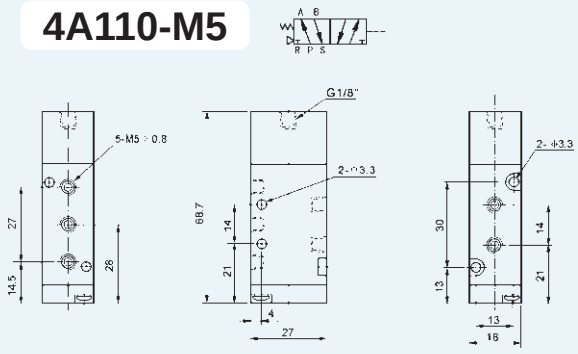


### 4A110-06

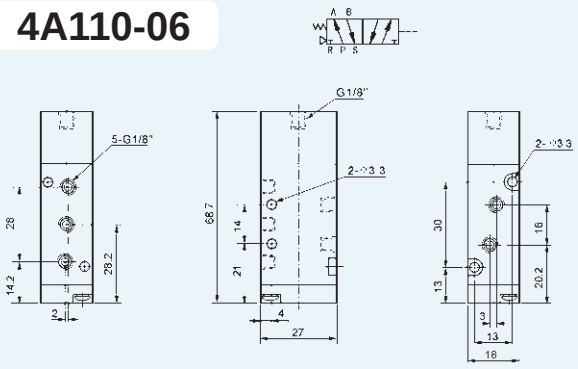


### 4A120-M5

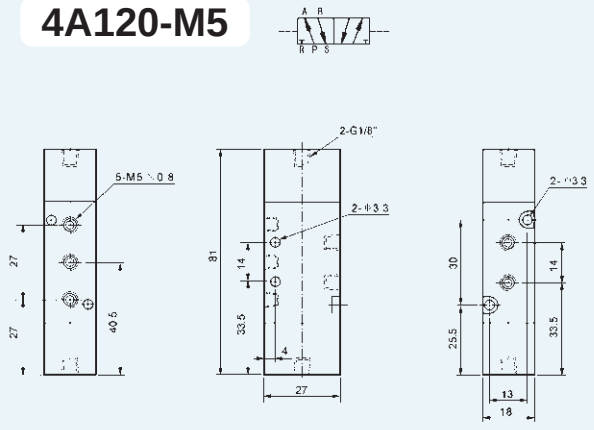


### 4A120-06

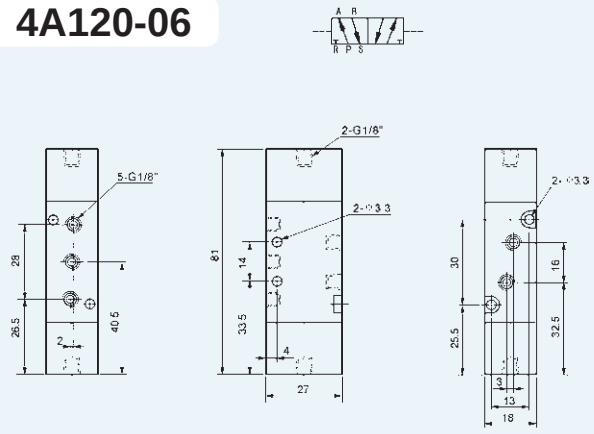


### 4A130-M5

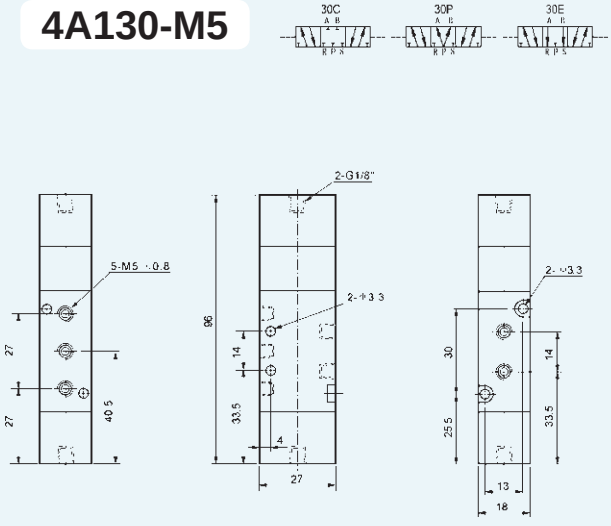


### 4A130-06

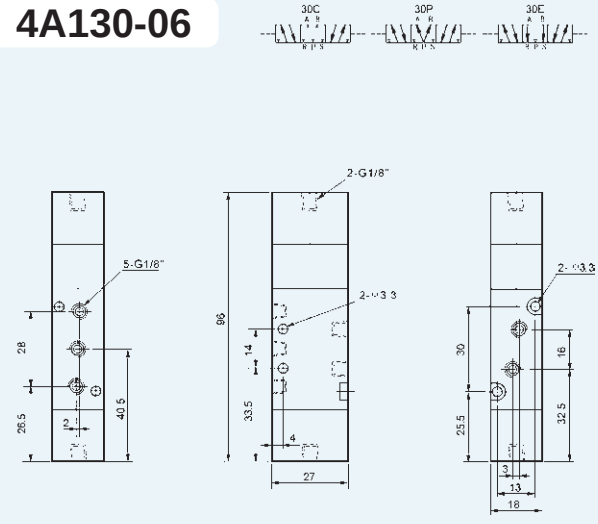


B

# 4V100系列电磁阀、气控阀
4V100 Series Solenoid Valve, Pneumatic Control Valve

## 外形尺寸 | Overall Dimension

### 3V110-M5

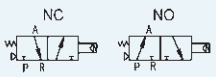


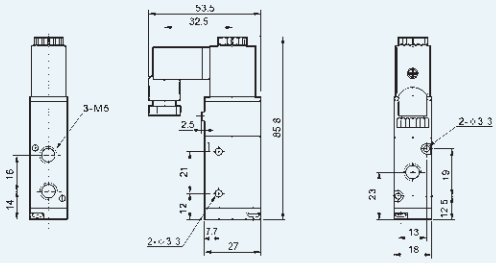


### 3V110-06

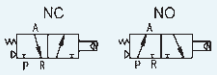


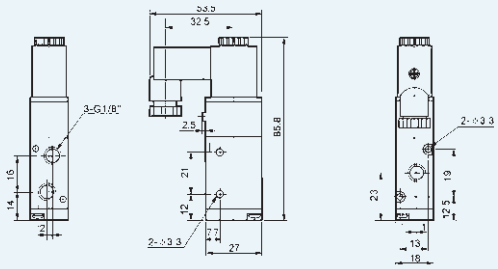


### 3V120-M5

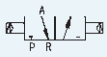


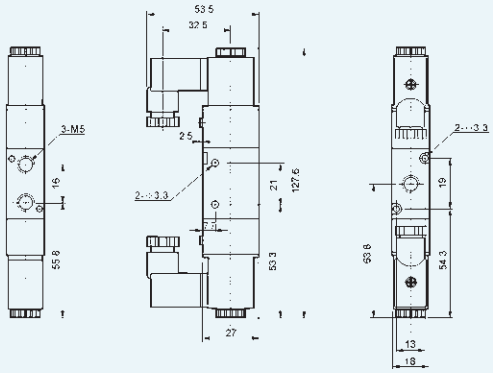


### 3V120-06

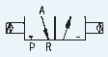


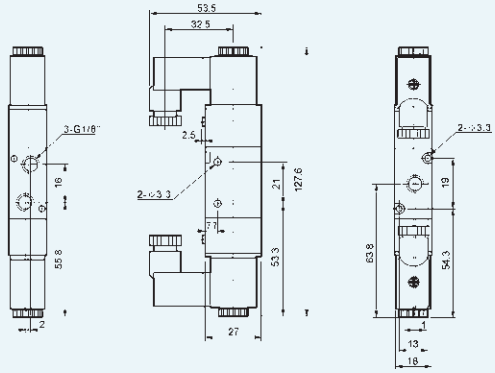


### 3A110-M5

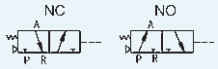


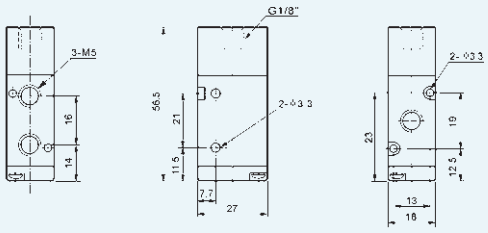


### 3A110-06

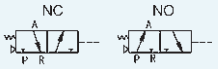


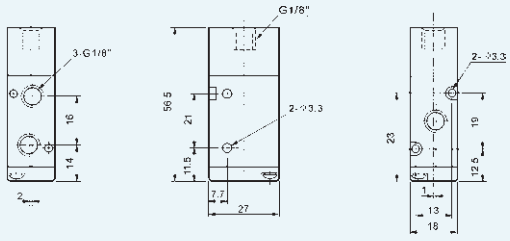


### 3A120-M5

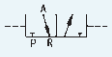


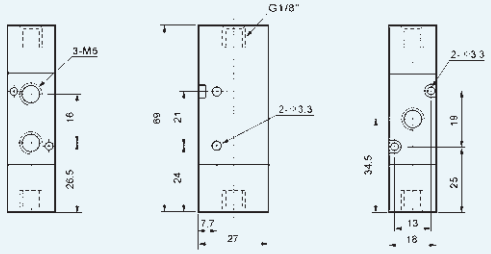


### 3A120-06

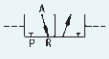


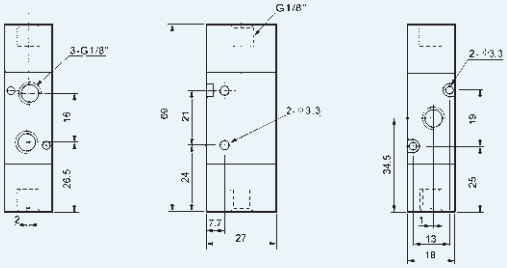

# 4V200系列电磁阀、气控阀
## 4V200 Series Solenoid Valve, Pneumatic Control Valve

## 订购码 | Ordering Code

| 4V | 2 | 10 | – | 08 | B | AC220V | – | W |
|---|---|---|---|---|---|---|---|---|

**4V**
规格代码
4V:二(三)位五通电磁阀
4A:二(三)位五通气控阀
3V:二位三通电磁阀
3A:二位三通气控阀
**Model**
4V:Two (Three)-position Five-way Solenoid Valve
4A:Two (Three)-position Five-way Pneumatic Control Valve
3V:Two-position Three-way Solenoid Valve
3A:Two-position Three-way Pneumatic Control Valve

**2**
系列代码
200系列
**Body size**
200 Series

**10**
线圈及位数
10:单头双位置
20:双头双位置
30C:双头三位置封闭型
30E:双头三位置排气型
30P:双头三位置压力型
**Coil and Places**
10:Single-head Double-position
20:Double-head Double-position
30C:Double-head Three-position Close Type
30E:Double-head Three-position Exhaust Type
30P:Double-head Three-position Pressure Type

**08**
接管口径
**Port size**
06: 1/8″
08: 1/4″

**B**
接管形式及初始状态
空白:管接式
B:二位五通板接式
三位五通板接式
NC:二位三通常闭型
NO:二位三通常开型
**Joint Pipe Form and Initial State**
Blank:Pipe Connection Type
B:Two-position Five-way Plate Connection Type
Three-position Five-way Plate Connection Type
NC:Two-position Three-way Normal Close Type
NO:Two-position Three-way Normal Open Type

**AC220V**
标准电压
**Standard Voltage**
DC12V
DC24V
AC24V 50Hz/60Hz
AC110V 50Hz/60Hz
AC220V 50Hz/60Hz
AC380V 50Hz/60Hz

**W**
接线形式
空白：标准端子式
LD:茶色带灯端子式
LD1:白色带灯端子式
W:引线式
**Wiring Form**
Blank:standard Connector
LD:Brown with Lighting Connector
LD1:White with Lighting Connector
W: Lead Wire Type

## 规格 | Specification

| 型 号<br>Model | 4V210-06 4V220-06<br>4A210-06 4A220-06 | 4V230C-06 4V230E-06 4V230P-06<br>4A230C-06 4A230E-06 4A230P-06 | 4V210-08 4V220-08<br>4A210-08 4A220-08 | 4V230C-08 4V230E-08 4V230P-08<br>4A230C-08 4A230E-08 4A230P-08 |
|---|---|---|---|---|
| 位通数<br>Position and Way NO. | 二位五通<br>Two-position Five-way | 三位五通<br>Three-position Five-way | 二位五通<br>Two-position Five-way | 三位五通<br>Three-position Five-way |
| 有效截面积<br>Effective Sectional Area | 14mm²(CV=0.78) | 12mm²(CV=0.67) | 16mm²(CV=0.89) | 12mm²(CV=0.67) |
| 型 号<br>Model | 3V210-06 3V220-06 3A210-06 3A220-06 | | 3V210-08 3V220-08 3A210-08 3A220-08 | |
| 位通数<br>Position and Way NO. | 二位三通 Two-position Three-way | | 二位三通 Two-position Three-way | |
| 有效截面积<br>Effective Section Area | 14mm²(CV=0.78) | | 16mm²(CV=0.89) | |
| 接管口径<br>Joint Pipe Bore | 进气＝出气＝排气＝G1/8"<br>Air Inlet=Air Outlet=Exhaust=G1/8" | | 进气＝出气＝G1/4″ 排气＝G1/8″<br>Air Inlet=Air Outlet=G1/4″ Exhaust=G1/8″ | |
| 工作介质<br>Working Medium | 经40微米过滤的空气 40 Micron Filtered Air | | | |
| 动作方式<br>Motion Pattern | 内部先导式 Inner Guide Type | | | |
| 使用压力<br>Working-pressure | 0.15~0.8MPa | | | |
| 最大耐压力<br>Max. Pressure Resistance | 1.2MPa | | | |
| 工作温度<br>Operating Temperature | 5~50℃ | | | |
| 电压范围<br>Voltage Range | ±10% | | | |
| 耗电量<br>Power Consumption | AC: 4.5VA DC: 3W | | | |
| 绝缘性及防护等级<br>Insulation & Protection Class | F级. IP65 F Class. IP65 | | | |
| 接线形式<br>Wiring Form | 出线式或端子式 Lead Wire or Connector type | | | |
| 最高动作频率<br>Highest Action Frequency | 每秒五次 5 Cycle / Sec | | | |
| 最短励磁时间<br>Shortest Excitation Time | 0.05秒 0.05 Second | | | |

# 4V200系列电磁阀、气控阀
4V200 Series Solenoid Valve, Pneumatic Control Valve

## 外形尺寸 | Overall Dimension

### 4V210-06

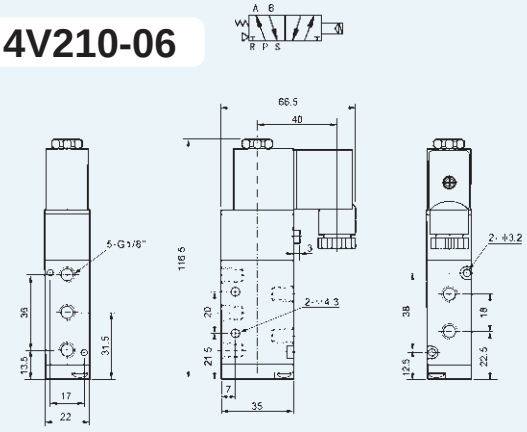


### 4V21 0-08

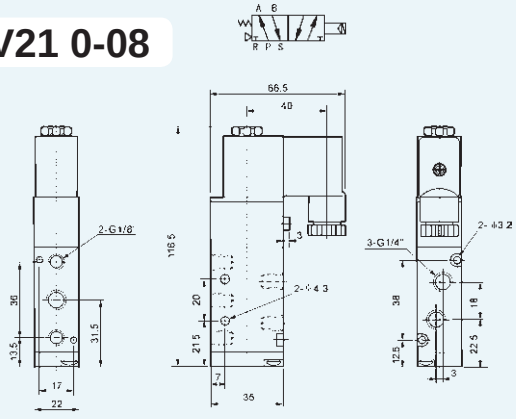


### 4V220-06

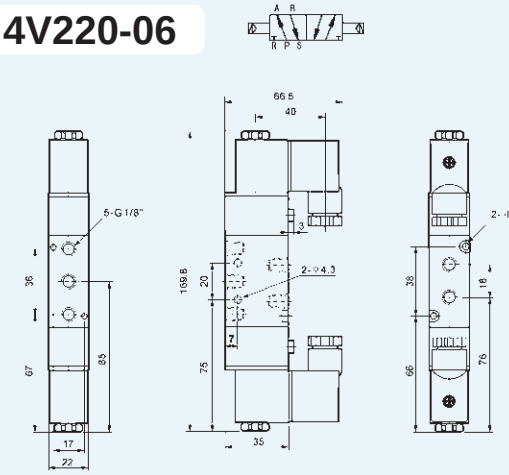


### 4V220-08

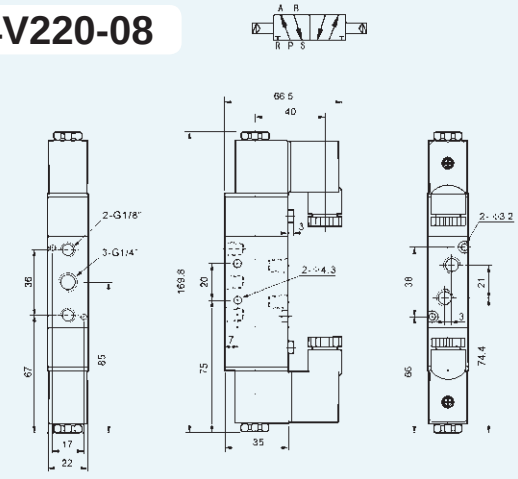


### 4V230-06

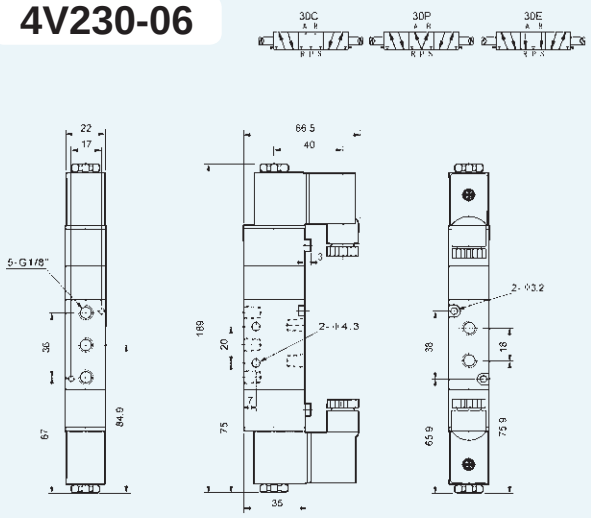


### 4V230-08

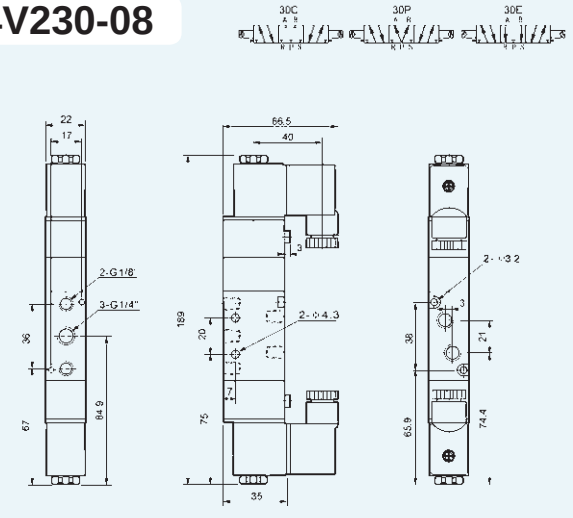

# 4V200系列电磁阀、气控阀
4V200 Series Solenoid Valve, Pneumatic Control Valve

## 外形尺寸 | Overall Dimension

### 4V210-06B

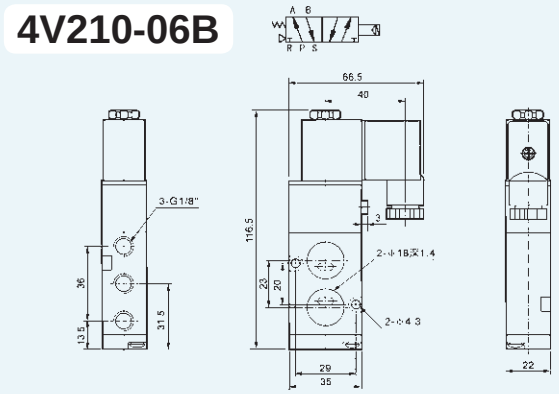


### 4V210-08B

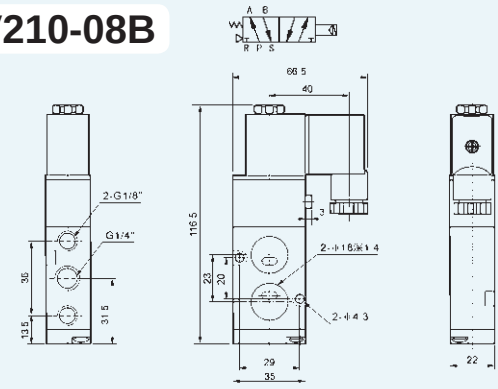


### 4V220-06B

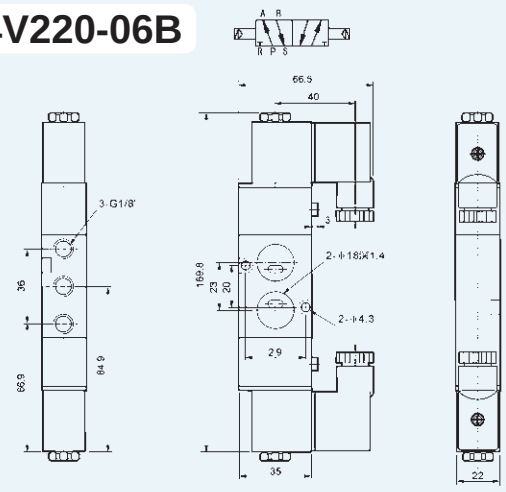


### 4V220-08B

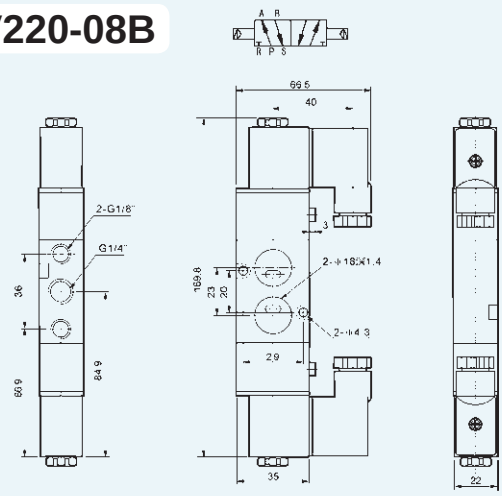


### 4V230-06B

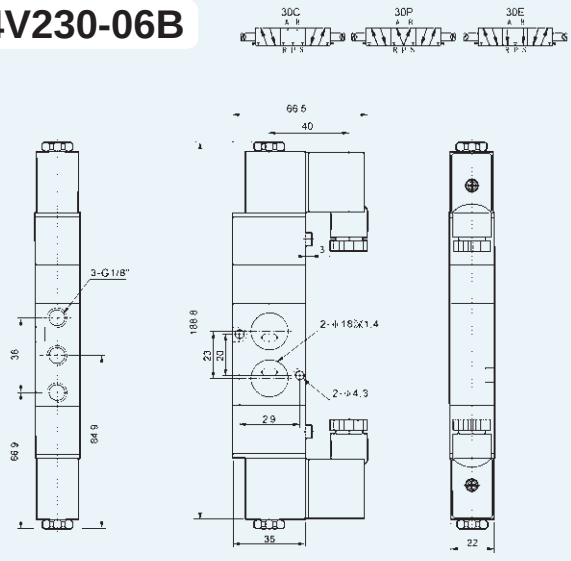


### 4V230-08B

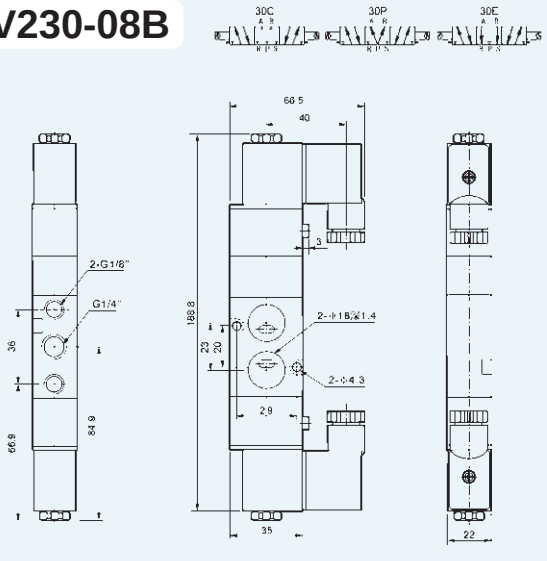


B

# 4V200系列电磁阀、气控阀
4V200 Series Solenoid Valve, Pneumatic Control Valve

## 外形尺寸 | Overall Dimension

### 4A210-06

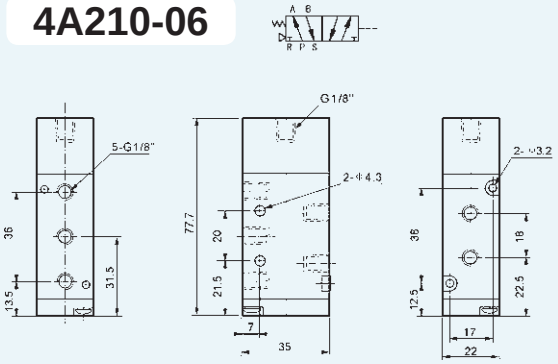


### 4A210-08

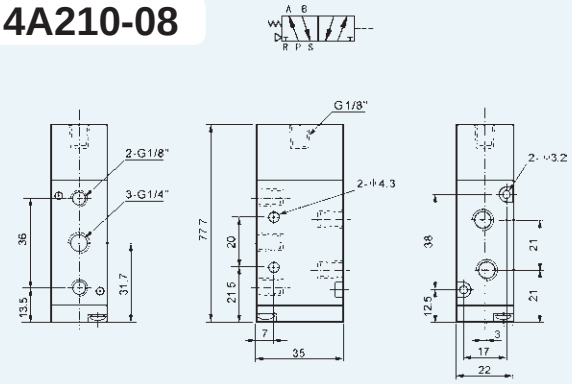


### 4A220-06

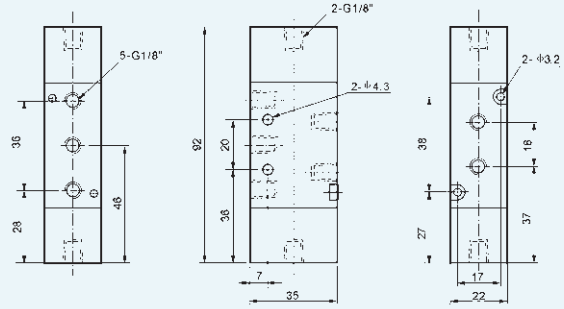


### 4A220-08

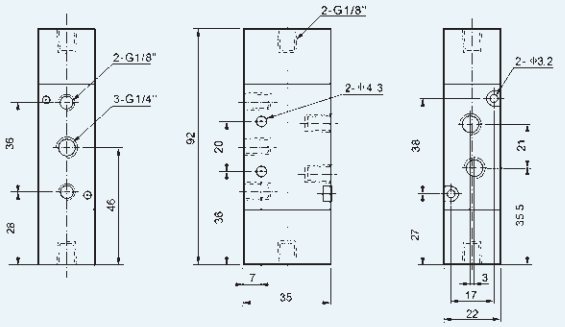


### 4A230-06

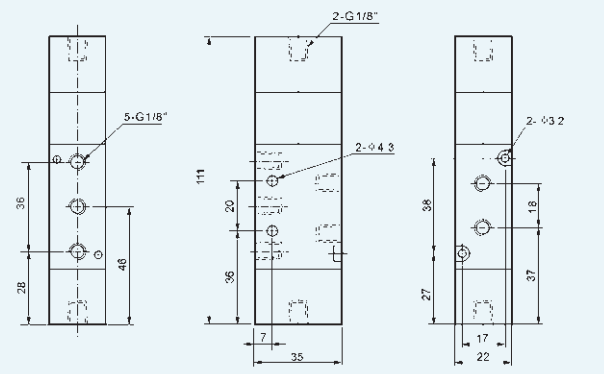


### 4A230-08

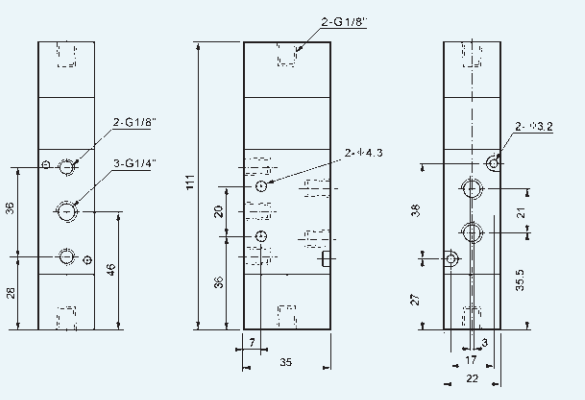

# 4V200系列电磁阀、气控阀
4V200 Series Solenoid Valve, Pneumatic Control Valve

## 外形尺寸 | Overall Dimension

### 3V210-06

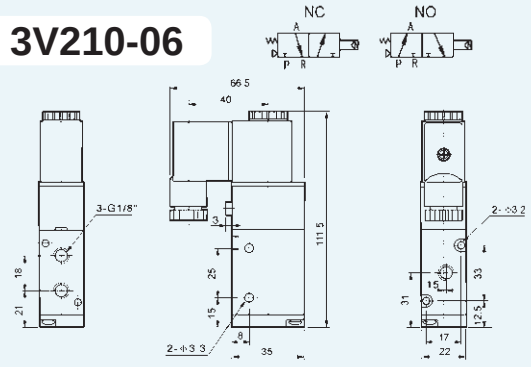


### 3V210-08

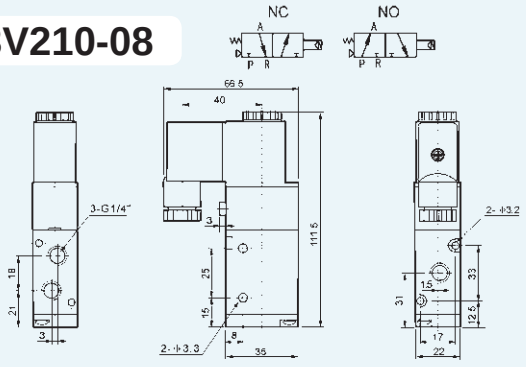


### 3V220-06

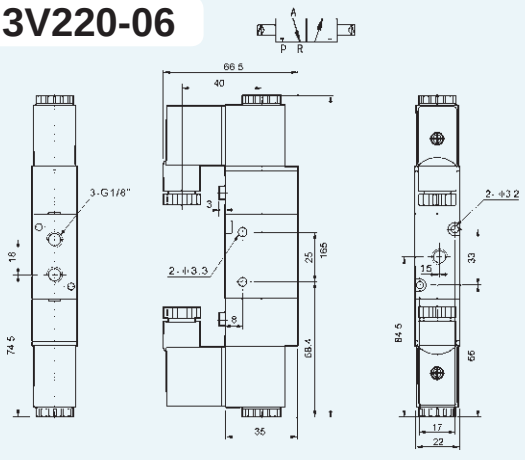


### 3V220-08

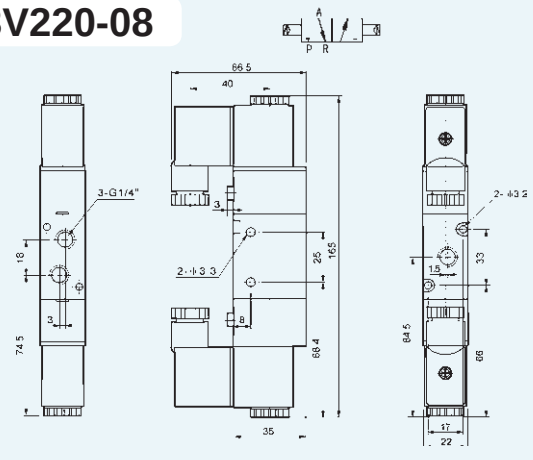


### 3A210-06

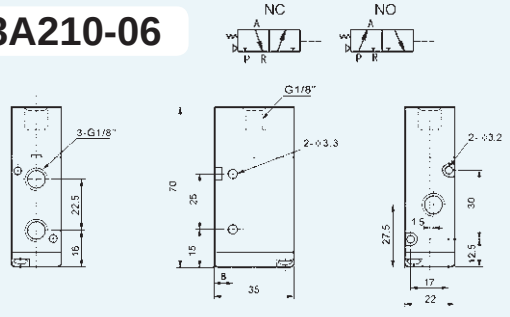


### 3A210-08

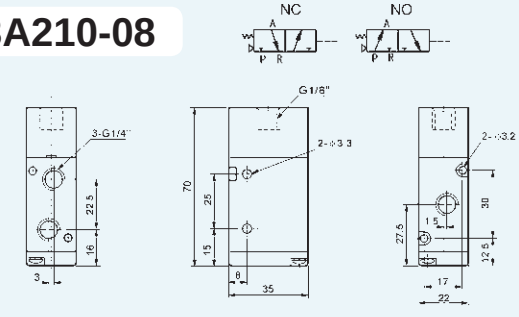


### 3A220-06

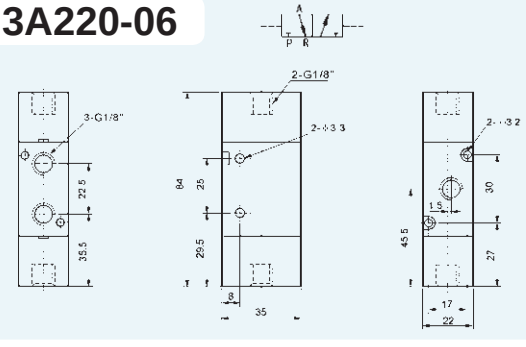


### 3A220-08

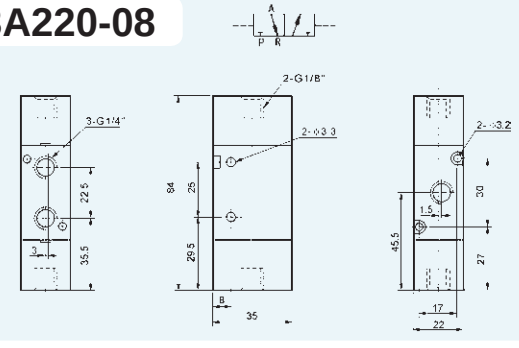


B

# 4V300系列电磁阀、气控阀
4V300 Series Solenoid Valve, Pneumatic Control Valve

## 订购码 | Ordering Code

| 4V | 3 | 10 | – | 10 | B | AC220V | – | W |
|---|---|---|---|---|---|---|---|---|

规格代码
4V:二(三)位五通电磁阀
4A:二(三)位五通气控阀
3V:二位三通电磁阀
3A:二位三通气控阀
**Model**
4V:Two (Three)-position Five-way Solenoid Valve
4A:Two (Three)-position Five-way Pneumatic Control Valve
3V:Two-position Three-way Solenoid Valve
3A:Two-position Three-way Pneumatic Control Valve

系列代码
300系列
**Body size**
300 Series

线圈及位数
10:单头双位置
20:双头双位置
30C:双头三位置封闭型
30E:双头三位置排气型
30P:双头三位置压力型
**Coil and Places**
10:Single-head Double-position
20:Double-head Double-position
30C:Double-head Three-position Close Type
30E:Double-head Three-position Exhaust Type
30P:Double-head Three-position Pressure Type

接管口径
**Port size**
08: 1/4″
10: 3/8″

接管形式及初始状态
空白:管接式
B:二位五通板接式
三位五通板接式
NC:二位三通常闭型
NO:二位三通常开型
**Joint Pipe Form and Initial State**
Blank:Pipe Connection Type
B:Two-position Five-way Plate Connection Type
Three-position Five-way Plate Connection Type
NC:Two-position Three-way Normal Close Type
NO:Two-position Three-way Normal Open Type

标准电压
**Standard Voltage**
DC12V
DC24V
AC24V 50Hz/60Hz
AC110V 50Hz/60Hz
AC220V 50Hz/60Hz
AC380V 50Hz/60Hz

接线形式
空白：标准端子式
LD:茶色带灯端子式
$LD_1$:白色带灯端子式
W:引线式
**Wiring Form**
Blank:standard Connector
LD:Brown with Lighting Connector
$LD_1$:White with Lighting Connector
W: Lead Wire Type

## 规格 | Specification

| 型 号<br>Model | 4V310-08 4V320-08<br>4A310-08 4V320-08 | 4V330C-08 4V330E-08 4V330P-08<br>4A330C-08 4A330E-08 4A330P-08 | 4V310-10 4V320-10<br>4A310-10 4A320-10 | 4V330C-10 4V330E-10 4V330P-10<br>4A330C-10 4A330E-10 4A330P-10 |
|---|---|---|---|---|
| 位通数<br>Position and Way NO. | 二位五通<br>Two-position Five-way | 三位五通<br>Three-position Five-way | 二位五通<br>Two-position Five-way | 三位五通<br>Three-position Five-way |
| 有效截面积<br>Effective Sectional Area | 25mm²(CV=1.40) | 18mm²(CV=1.00) | 30mm²(CV=1.68) | 18mm²(CV=1.00) |
| 型 号<br>Model | 3V310-08 3V320-08 3A310-08 3A320-08 | | 3V310-10 3V320-10 3A310-10 3A320-10 | |
| 位通数<br>Position and Way NO. | 二位三通 Two-position Three-way | | 二位三通 Two-position Three-way | |
| 有效截面积<br>Effective Section Area | 25mm²(CV=1.40) | | 30mm²(CV=1.68) | |
| 接管口径<br>Joint Pipe Bore | 进气＝出气＝排气＝G1/4"<br>Air Inlet=Air Outlet=Exhaust=G1/4" | | 进气＝出气＝G3/8″ 排气＝G1/4″<br>Air Inlet=Air Outlet=G3/8″ Exhaust=G1/4″ | |
| 工作介质<br>Working Medium | 经40微米过滤的空气 40 Micron Filtered Air | | | |
| 动作方式<br>Motion Pattern | 内部先导式 Inner Guide Type | | | |
| 使用压力<br>Working-pressure | 0.15~0.8MPa | | | |
| 最大耐压力<br>Max. Pressure Resistance | 1.2MPa | | | |
| 工作温度<br>Operating Temperature | 5~50℃ | | | |
| 电压范围<br>Voltage Range | ±10% | | | |
| 耗电量<br>Power Consumption | AC: 4.5VA DC: 3W | | | |
| 绝缘性及防护等级<br>Insulation & Protection Class | F级．IP65 F Class. IP65 | | | |
| 接线形式<br>Wiring Form | 出线式或端子式 Lead Wire or Connector type | | | |
| 最高动作频率<br>Highest Action Frequency | 每秒五次 5 Cycle / Sec | | | |
| 最短励磁时间<br>Shortest Excitation Time | 0.05秒 0.05 Second | | | |

# 4V300系列电磁阀、气控阀
4V300 Series Solenoid Valve, Pneumatic Control Valve

## 外形尺寸 | Overall Dimension

### 4V310-08

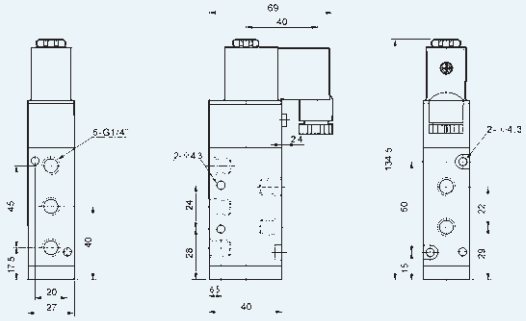

### 4V310-10

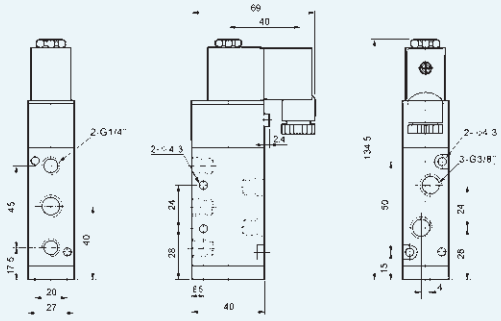

### 4V320-08

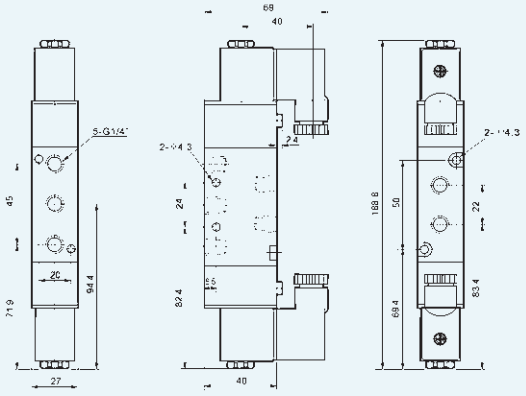

### 4V320-10

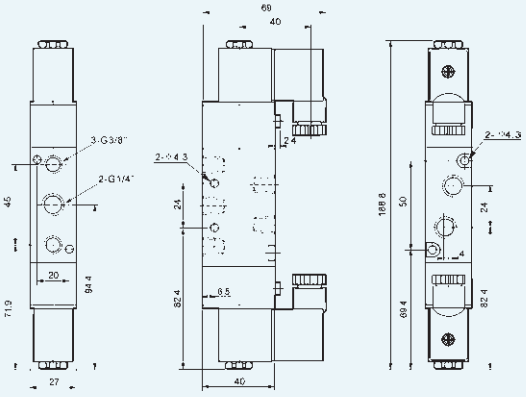

### 4V330-08

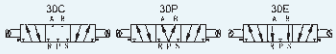

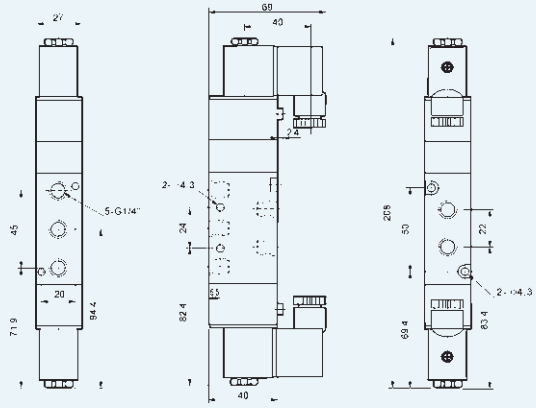

### 4V330-10

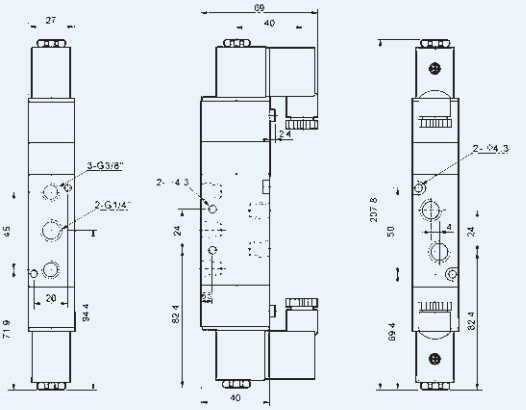

B

# 4V300系列电磁阀、气控阀
4V300 Series Solenoid Valve, Pneumatic Control Valve

## 外形尺寸 | Overall Dimension

### 4V310-08B

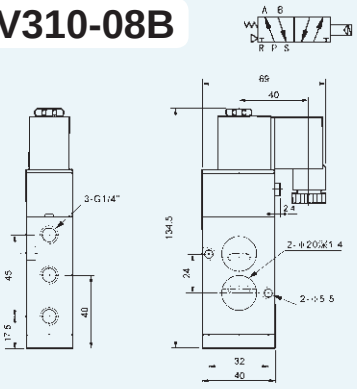


### 4V310-10B

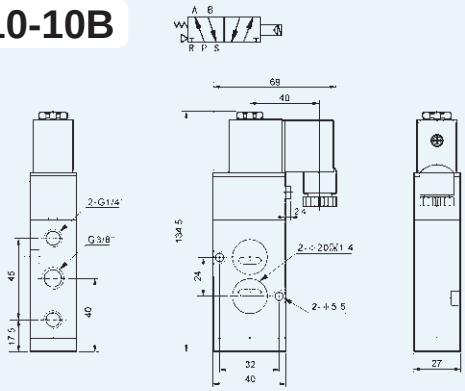


### 4V320-08B

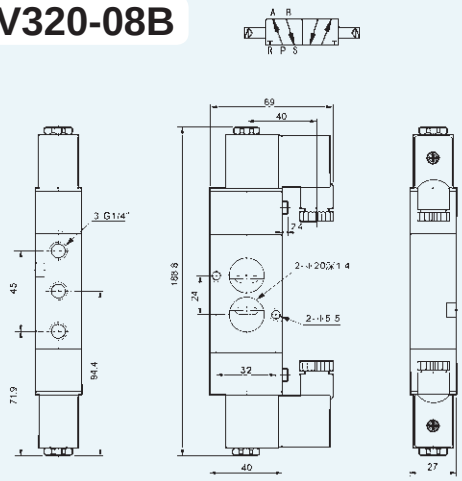


### 4V320-10B

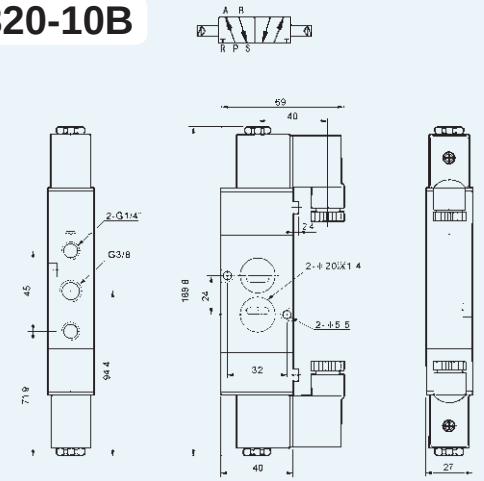


### 4V330-08B

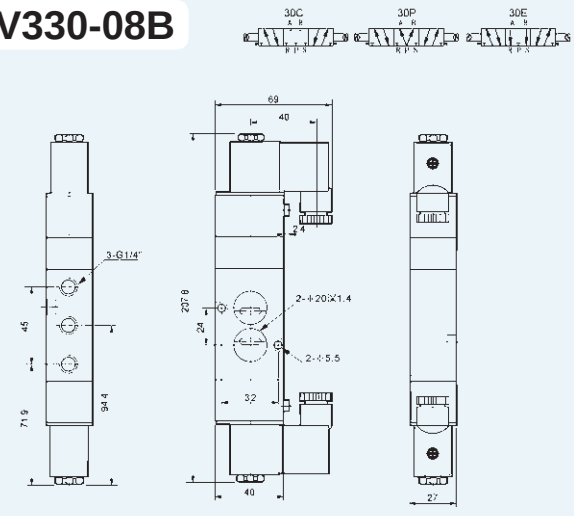


### 4V330-10B

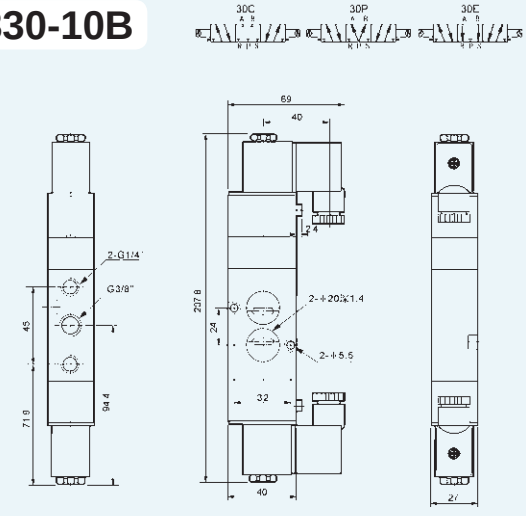

# 4V300系列电磁阀、气控阀
4V300 Series Solenoid Valve, Pneumatic Control Valve

## 外形尺寸 | Overall Dimension

### 3V310-08

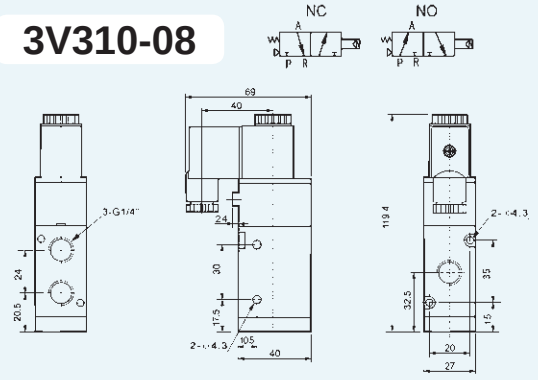


### 3V310-10

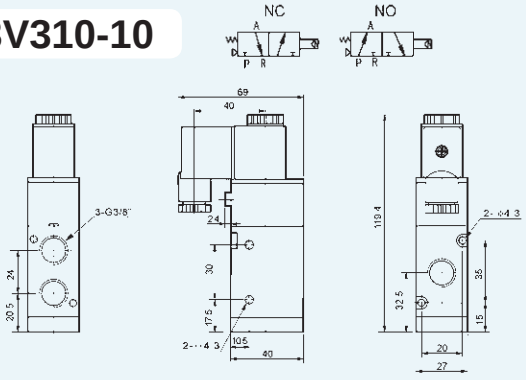


### 3V320-08

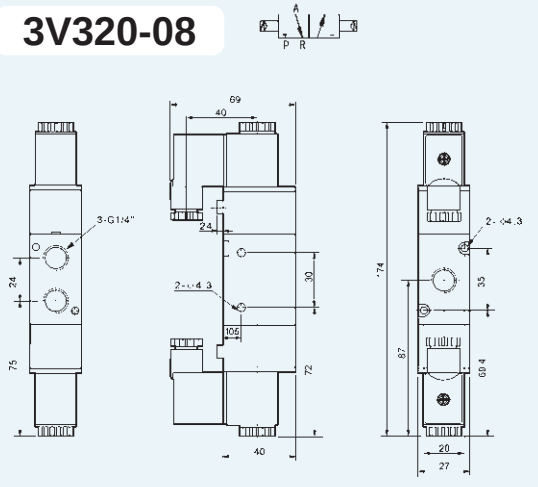


### 3V320-10

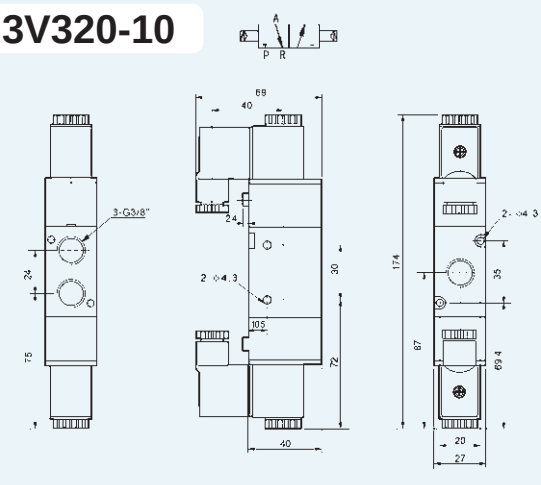


### 3A310-08

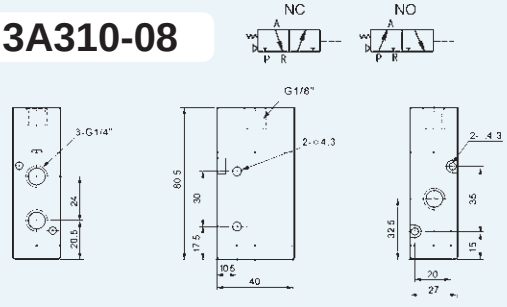


### 3A310-10

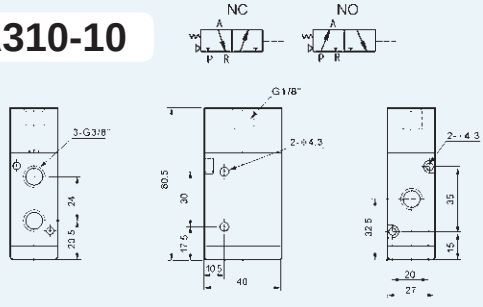


### 3A320-08

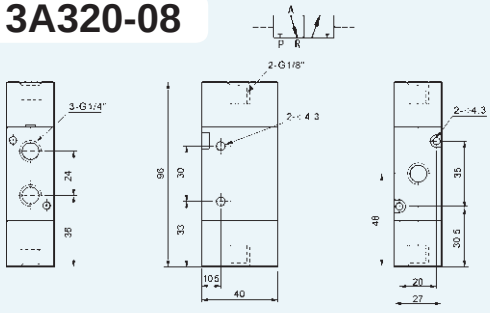


### 3A320-10

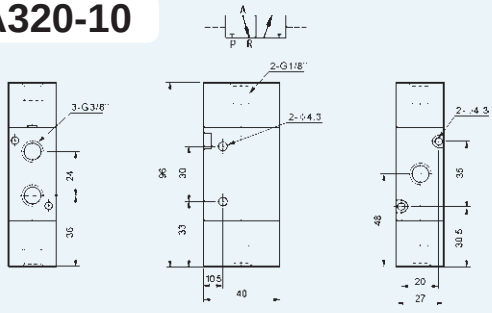


B

# 4V400系列电磁阀、气控阀
## 4V400 Series Solenoid Valve, Pneumatic Control Valve

## 订购码 | Ordering Code

**4V** — 规格代码
4V:二(三)位五通电磁阀
4A:二(三)位五通气控阀
3V:二位三通电磁阀
3A:二位三通气控阀
**Model**
4V:Two (Three)-position Five-way Solenoid Valve
4A:Two (Three)-position Five-way Pneumatic Control Valve
3V:Two-position Three-way Solenoid Valve
3A:Two-position Three-way Pneumatic Control Valve

**4** — 系列代码
400系列
**Body size**
400 Series

**10** — 线圈及位数
10:单头双位置
20:双头双位置
30C:双头三位置封闭型
30E:双头三位置排气型
30P:双头三位置压力型
**Coil and Places**
10:Single-head Double-position
20:Double-head Double-position
30C:Double-head Three-position Close Type
30E:Double-head Three-position Exhaust Type
30P:Double-head Three-position Pressure Type

**–**

**15** — 接管口径
**Port size**
15: 1/2″

**B** — 接管形式及初始状态
空白:管接式
B:二位五通板接式
三位五通板接式
NC:二位三通常闭型
NO:二位三通常开型
**Joint Pipe Form and Initial State**
Blank:Pipe Connection Type
B:Two-position Five-way Plate Connection Type
Three-position Five-way Plate Connection Type
NC:Two-position Three-way Normal Close Type
NO:Two-position Three-way Normal Open Type

**AC220V** — 标准电压
**Standard Voltage**
DC12V
DC24V
AC24V 50Hz/60Hz
AC110V 50Hz/60Hz
AC220V 50Hz/60Hz
AC380V 50Hz/60Hz

**–**

**W** — 接线形式
空白：标准端子式
LD:茶色带灯端子式
LD1:白色带灯端子式
W:引线式
**Wiring Form**
Blank:standard Connector
LD:Brown with Lighting Connector
LD1:White with Lighting Connector
W: Lead Wire Type

## 规格 | Specification

| 型 号 / Model | | | | | |
|---|---|---|---|---|---|
| | 4V410-15 | 4V420-15 | 4V430C-15 | 4V430E-15 | 4V430P-15 |
| | 4A410-15 | 4A420-15 | 4A430C-15 | 4A430E-15 | 4A430P-15 |
| 位通数 Position and Way NO. | 二位五通 Two-position Five-way | | 二位五通 Two-position Five-way | | |
| 有效截面积 Effective Sectional Area | 50mm²(CV=2.79) | | 30mm²(CV=1.68) | | |
| 型 号 Model | 3V410-15 | 3V420-15 | 3A410-15 | 3A420-15 | |
| 位通数 Position and Way NO. | 二位三通 Two-position Three-way | | | | |
| 有效截面积 Effective Section Area | 50mm²(CV=2.79) | | | | |
| 接管口径 Joint Pipe Bore | 进气＝出气＝排气＝G1/2″ Air Inlet=Air Outlet=Exhaust=G1/2″ | | | | |
| 工作介质 Working Medium | 经40微米过滤的空气 40 Micron Filtered Air | | | | |
| 动作方式 Motion Pattern | 内部先导式 Inner Guide Type | | | | |
| 使用压力 Working-pressure | 0.15~0.8MPa | | | | |
| 最大耐压力 Max. Pressure Resistance | 1.2MPa | | | | |
| 工作温度 Operating Temperature | 5~50℃ | | | | |
| 电压范围 Voltage Range | ±10% | | | | |
| 耗电量 Power Consumption | AC: 4.5VA DC: 3W | | | | |
| 绝缘性及防护等级 Insulation & Protection Class | F级. IP65 F Class. IP65 | | | | |
| 接线形式 Wiring Form | 出线式或端子式 Lead Wire or Connector type | | | | |
| 最高动作频率 Highest Action Frequency | 每秒五次 5 Cycle / Sec | | | | |
| 最短励磁时间 Shortest Excitation Time | 0.05秒 0.05 Second | | | | |

# 4V400系列电磁阀、气控阀
4V400 Series Solenoid Valve, Pneumatic Control Valve

## 外形尺寸 | Overall Dimension

### 4V410-15

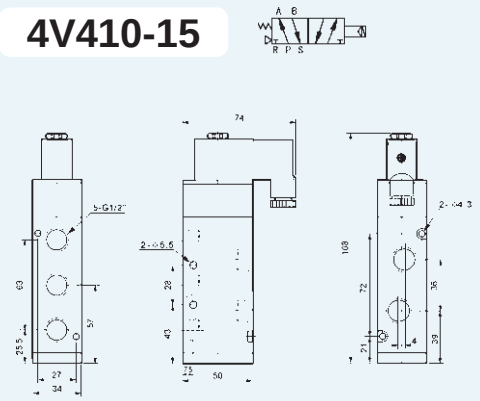

### 4V420-15
### 4V430-15

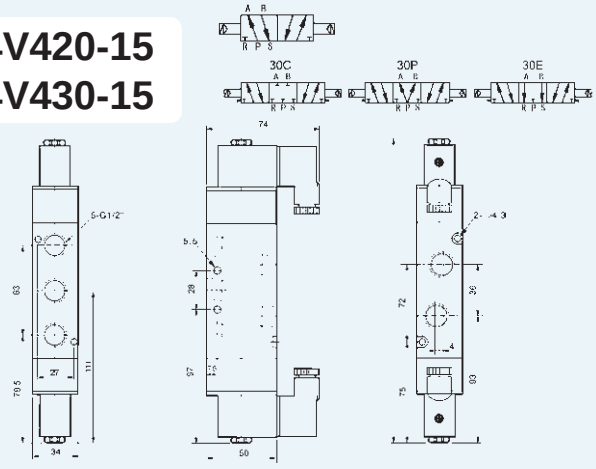

### 4A410-15

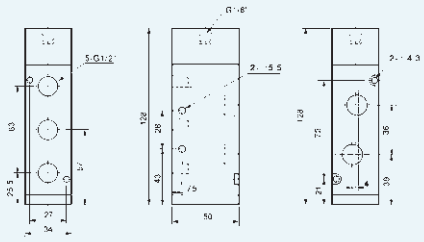

### 4A420-15
### 4A430-15

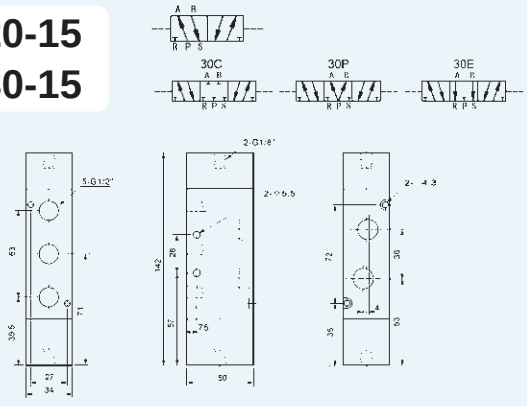

### 3V410-15

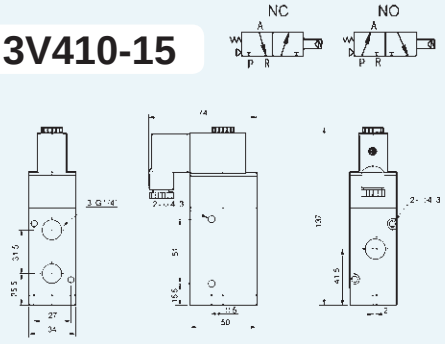

### 3V420-15

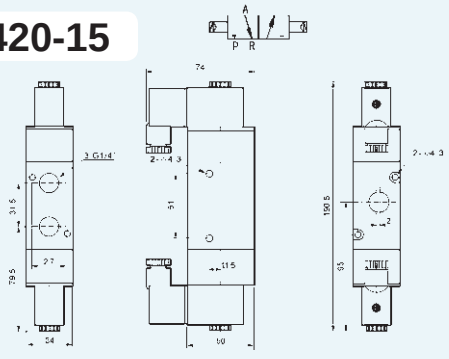

### 3A410-15

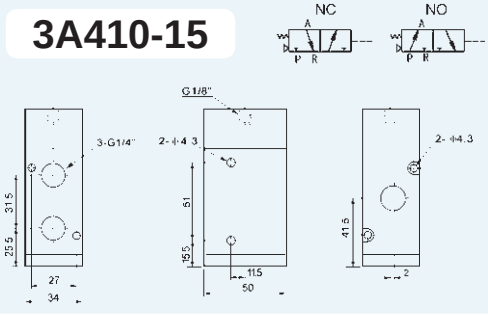

### 3A420-15

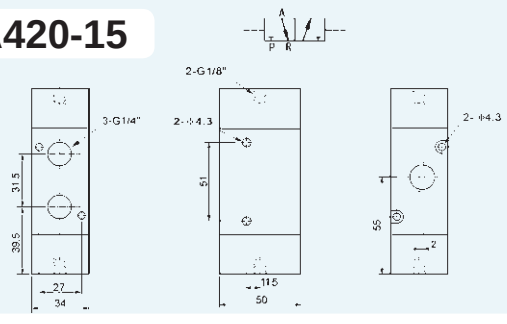

# 100-400系列底座
100 - 400 Series Base

## 订购码 | Ordering Code

**100M** – **□F**

**100M**
系列代码
100M: 100系列用底座
200M: 200系列用底座
300M: 300系列用底座
400M: 400系列用底座
**Series Code**
100M: Base for 100 Series Use
200M: Base for 200 Series Use
300M: Base for 300 Series Use
400M: Base for 400 Series Use

**□F**
连座数目
100M: 任意连
200M: 任意连
300M: 任意连
400M: 任意连
**Joint Base Number**
100M: Wantonly Joint
200M: Wantonly Joint
300M: Wantonly Joint
400M: Wantonly Joint

## 盲板订购码 | Blind Plate Ordering Code

**200M** – **B**

**200M**
系列代码
100M: 100系列用底座
200M: 200系列用底座
300M: 300系列用底座
400M: 400系列用底座
**Series Code**
100M: Base for 100 Series Use
200M: Base for 200 Series Use
300M: Base for 300 Series Use
400M: Base for 400 Series Use

**B**
盲目代号
B：底座用盲板
**Blind Plate Code**
B: Base Purposed Blind Plate

## 外形尺寸 | Overall Dimension

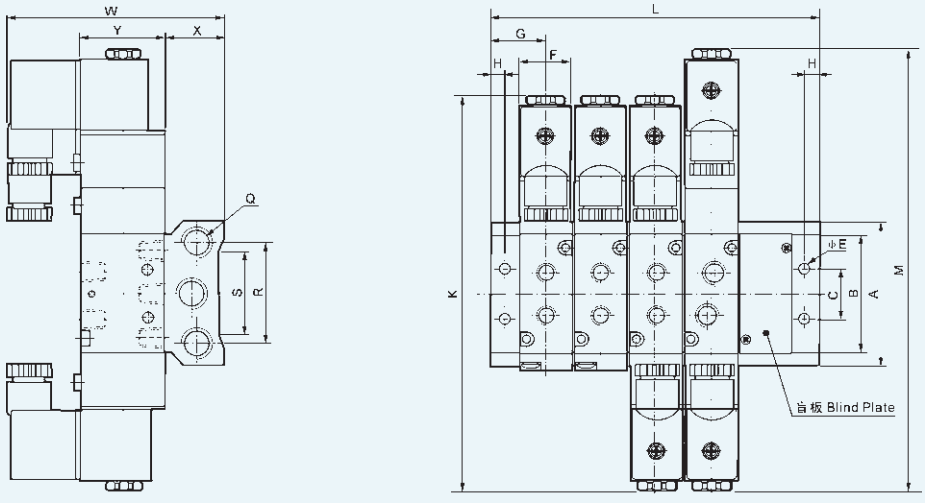


## 底座尺寸表 | Base Size Sheetsion

| 内径/符号 Inside Diameter/Symbol | A | B | C | E | F | G | H | K | L | M | Q | R | S | W | X | Y |
|---|---|---|---|---|---|---|---|---|---|---|---|---|---|---|---|---|
| 100M-□F | 58 | 44 | 20 | 4.2 | 18.3 | 19 | 5 | 140 | (n-1)x19+38 | 155 | G1/4 | 40 | 30 | 78.5 | 25 | 27 |
| 200M-□F | 61 | 51 | 21 | 4.3 | 22.4 | 23 | 6 | 170 | (n-1)x23+46 | 189 | G1/4 | 43 | 32 | 92.5 | 26 | 35 |
| 300M-□F | 75 | 65 | 26 | 4.5 | 27.3 | 27 | 6 | 189 | (n-1)x28+54 | 208 | G3/8 | 53 | 48 | 99 | 30 | 40 |
| 400M-□F | 104 | 95 | 32 | 5.5 | 34.3 | 31.5 | 7 | 222 | (n-1)x35+63 | 243 | G1/2 | 68 | 67 | 112 | 38 | 50 |

# 3V1系列电磁阀
3V1 Series Solenoid Valve

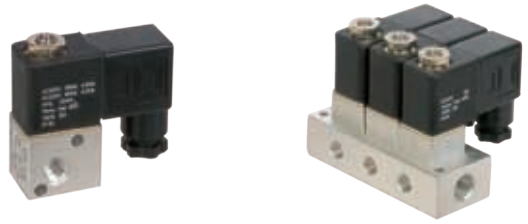

## 订购码 | Ordering Code

| 3V | 1 | – | 06 | B | – | AC220V | – | W |
|---|---|---|---|---|---|---|---|---|

规格代码
3V:二位三通电磁阀
**Model**
3V: Two-position Three-way Solenoid Valve

系列代码
1:100系列
**Body size**
1: 1 Series

接管口径
**Port size**
M5: M5
06: 1/8″

连接方式
空白:管接式
B:板接式
**Connecting Type**
Blank:Pipe Connection Type
B:Plate Connection Type

标准电压
**Standard Voltage**
DC12V
DC24V
AC24V 50Hz/60Hz
AC110V 50Hz/60Hz
AC220V 50Hz/60Hz
AC380V 50Hz/60Hz

接线形式
空白：标准端子式
LD:茶色带灯端子式
LD1:白色带灯端子式
W:引线式
**Wiring Form**
Blank:standard Connector
LD:Brown with Lighting Connector
LD1:White with Lighting Connector
W: Lead Wire Type

B

## 规格 | Specification

| 型 号 Model | 3V1-M5 | 3V1-M5 |
|---|---|---|
| 工作介质 Working Medium | 经40微米过滤的空气 40 Micron Filtered Air | |
| 动作方式 Motion Pattern | 直动式 Direct Drive Type | |
| 接管口径 Joint Pipe Bore | M5 | 1/8” |
| 周围温度 Ambient Temperature | -10~+60℃ | |
| 气体温度 Gas Temperature | 5~60℃ | |
| 出风口直径 Air Outlet Diameter | 1.0mm | |
| 润滑 Lubrication | 不需要 Not Necessary | |
| 使用压力 Working-pressure | 0~0.8MPa | |
| 最大耐压力 Max. Pressure Resistance | 1.2MPa | |
| 耗电量 Power Consumption | AC: 4.5VA DC: 3W | |
| 保护等级 Protect Class | IP65 | |
| 接电形式 Power Connection Form | 出线式或端子式 Lead Wire or Connector type | |
| 本体材质 Material of Body | 铝合金 Aluminum alloy | |
| 最高动作频率 Highest Action Frequency | 每秒十次 10 Cycle / Sec | |
| 绝缘性 Insulation | F级 F Class | |
| 电压范围 Voltage Range | ±10% | |
| 最短励磁时间 Shortest Excitation Time | 0.05秒 0.05 Second | |

## 外形尺寸 | Overall Dimension

### 3V1-06

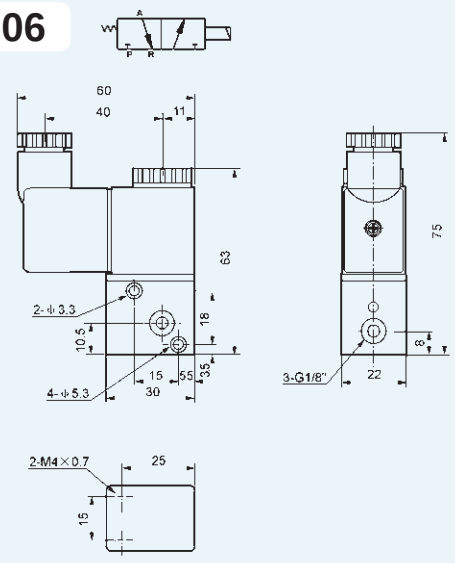


### 3V1-06-3F

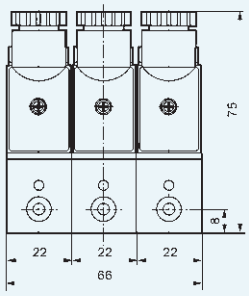

# VF、VZ系列电磁阀
VF,VZ Series Solenoid Valve

## 订购码 | Ordering Code

**VF3 1 – 30 AC220V – W**

- **VF3**
  - 系列代码
  - VF3系列
  - VF5系列
  - VZ5系列
  - **Model**
  - VF3 Series
  - VF5 Series
  - VZ5 Series
- **1**
  - 线圈及位数
  - 1:单头双位置
  - 2:双头双位置
  - 3:双头三位置封闭型
  - 4:双头三位置排气型
  - 5:双头三位置压力型
  - **Coil and Places**
  - 1:Single-head Double-position
  - 2:Double-head Double-position
  - 3C:Double-head Three-position Close Type
  - 4:Double-head Three-position Exhaust Type
  - 5:Double-head Three-position Pressure Type
- **30**
  - 顺序号
  - **Order NO.**
  - VF3:30
  - VF5:20
  - VZ5:20
- **AC220V**
  - 标准电压
  - **Standard Voltage**
  - DC12V
  - DC24V
  - AC24V 50Hz/60Hz
  - AC110V 50Hz/60Hz
  - AC220V 50Hz/60Hz
  - AC380V 50Hz/60Hz
- **W**
  - 接线形式
  - 空白：标准端子式
  - LD:茶色带灯端子式
  - LD1:白色带灯端子式
  - W:引线式
  - **Wiring Form**
  - Blank:standard Connector
  - LD:Brown with Lighting Connector
  - LD1:White with Lighting Connector
  - W: Lead Wire Type

## 底座订购码
Base Ordering Code

**VF3000M – □F**

- **VF3000M**
  - 系列代码
  - VF3000M:VF3系列用
  - VF5000M:VF5系列用
  - VZ5000M:VZ5系列用
  - **Series Code**
  - VF3000M: For VF3 Series Use
  - VF5000M: For VF5 Series Use
  - VZ5000M: For VZ5 Series Use
- **□F**
  - 连座数目
  - VF3000M:任意连
  - VF5000M:任意连
  - VZ5000M:任意连
  - **Joint Base Number**
  - VF3000M: Wantonly Joint
  - VF5000M: Wantonly Joint
  - VZ5000M: Wantonly Joint

## 规格 | Specification

| 型 号 Model | VF3130 VF3230 | VF33(4/5)30 | VF5120 VF5220 | VF53(4/5)50 | VZ5120 VF5220 | VZ53(4/5)50 |
|---|---|---|---|---|---|---|
| 位通数 Position and Way NO. | 二位五通 Two-position Five-way | 三位五通 Three-position Five-way | 二位五通 Two-position Five-way | 三位五通 Three-position Five-way | 二位五通 Two-position Five-way | 三位五通 Three-position Five-way |
| 有效截面积 Effective Section Area | 16mm$^2$(CV=0.89) | 12mm$^2$(CV=0.67) | 25mm$^2$(CV=1.40) | 18mm$^2$(CV=1.00) | 12mm$^2$(CV=0.67) | 9mm$^2$(CV=0.50) |
| 工作介质 Working Medium | 经40微米过滤的空气 40 Micron Filtered Air | | | | | |
| 动作方式 Motion Pattern | 内部先导式 Inner Guide Type | | | | | |
| 使用压力 Working-pressure | 0.15~0.8MPa | | | | | |
| 最大耐压力 Max. Pressure Resistance | 1.2MPa | | | | | |
| 工作温度 Operating Temperature | 5~50℃ | | | | | |
| 电压范围 Voltage Range | ±10% | | | | | |
| 耗电量 Power Consumption | AC: 4.5VA DC: 3W | | | | | |
| 绝缘性及防护等级 Insulation & Protection Class | F级．IP65 F Class. IP65 | | | | | |
| 接线形式 Wiring Form | 出线式或端子式 Lead Wire or Connector type | | | | | |
| 最高动作频率 Highest Action Frequency | 每秒五次 5 Cycle / Sec | | | | | |
| 最短励磁时间 Shortest Excitation Time | 0.05秒 0.05 Second | | | | | |

# VF、VZ系列电磁阀
VF,VZ Series Solenoid Valve

## 外形尺寸 | Overall Dimension

### VF3130

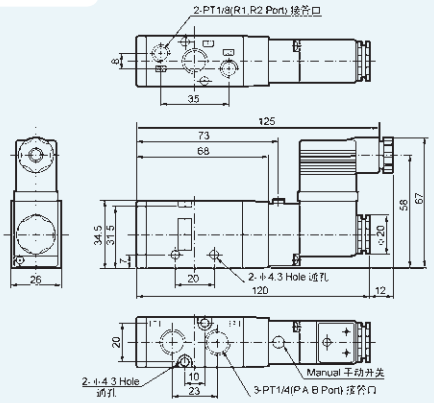


### VF3230

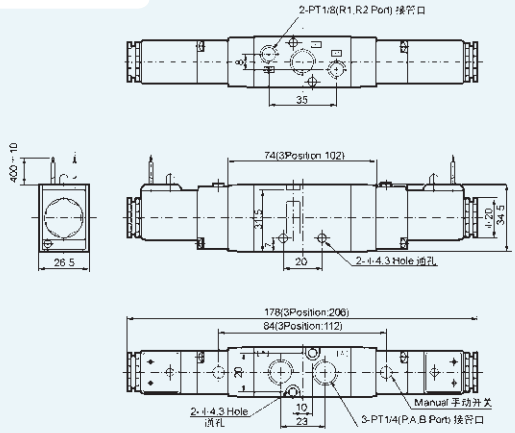


### VF5120

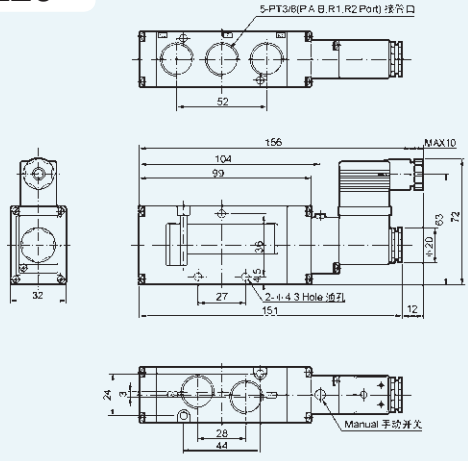


### VF5220

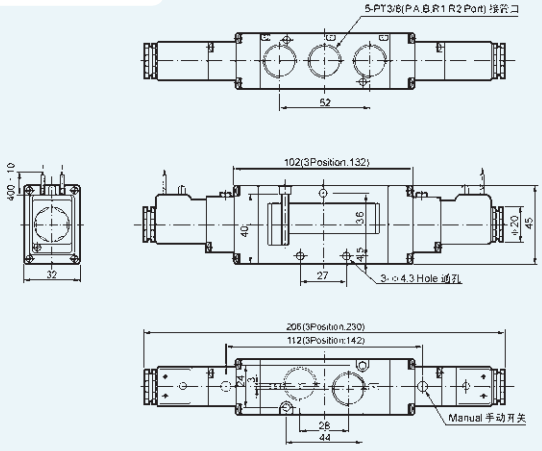


### VZ5120

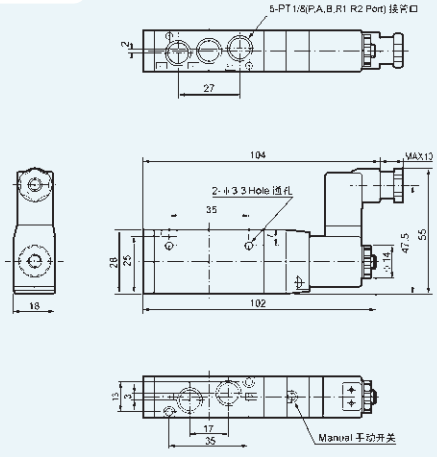


### VZ5220

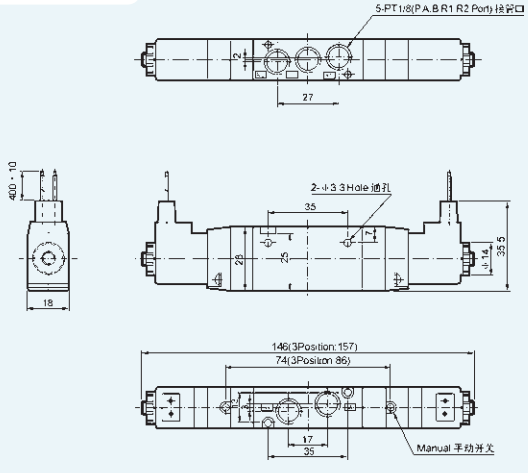


B

# VF、VZ系列电磁阀
VF,VZ Series Solenoid Valve

## 外形尺寸 | Overall Dimension

### VF3000M

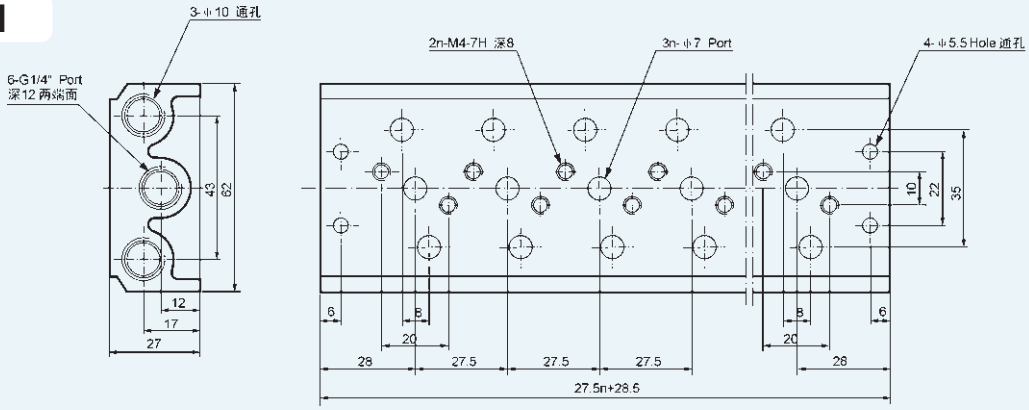


### VF5000M

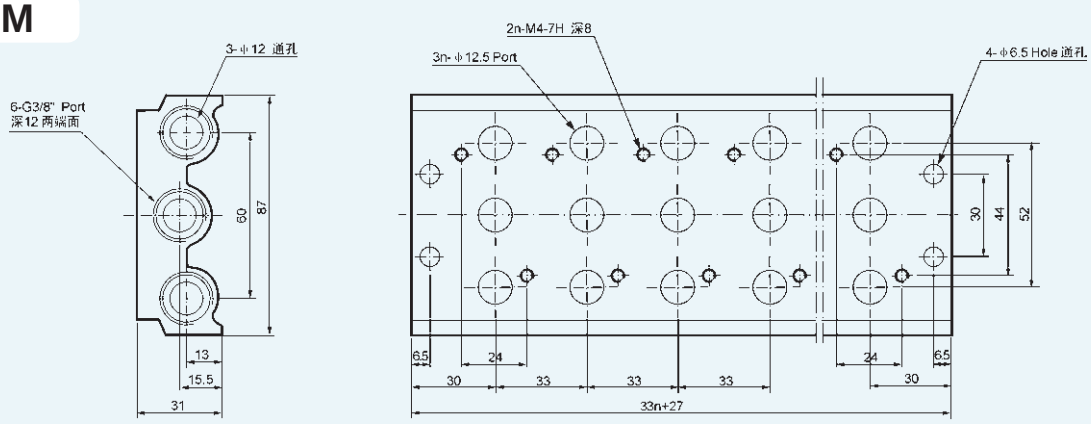


### VZ5000M

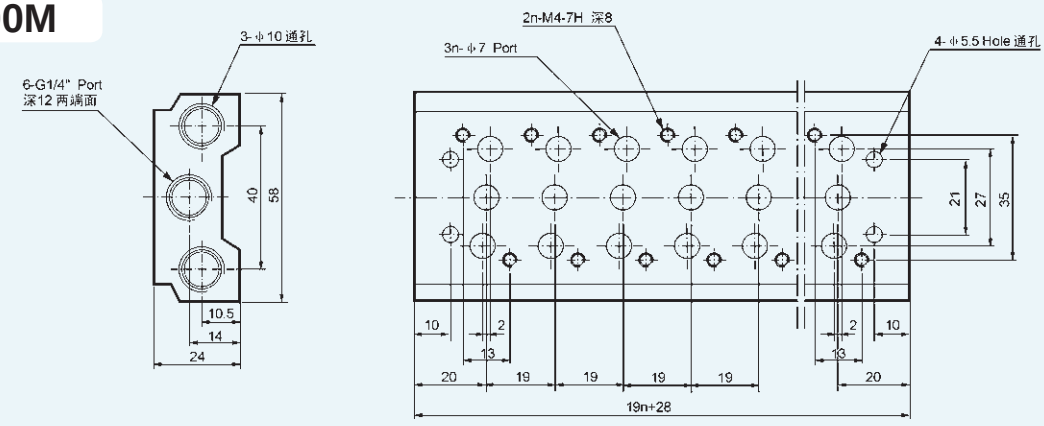

# MVSD-600系列电磁阀
## MVSD-600 Series Solenoid Valve

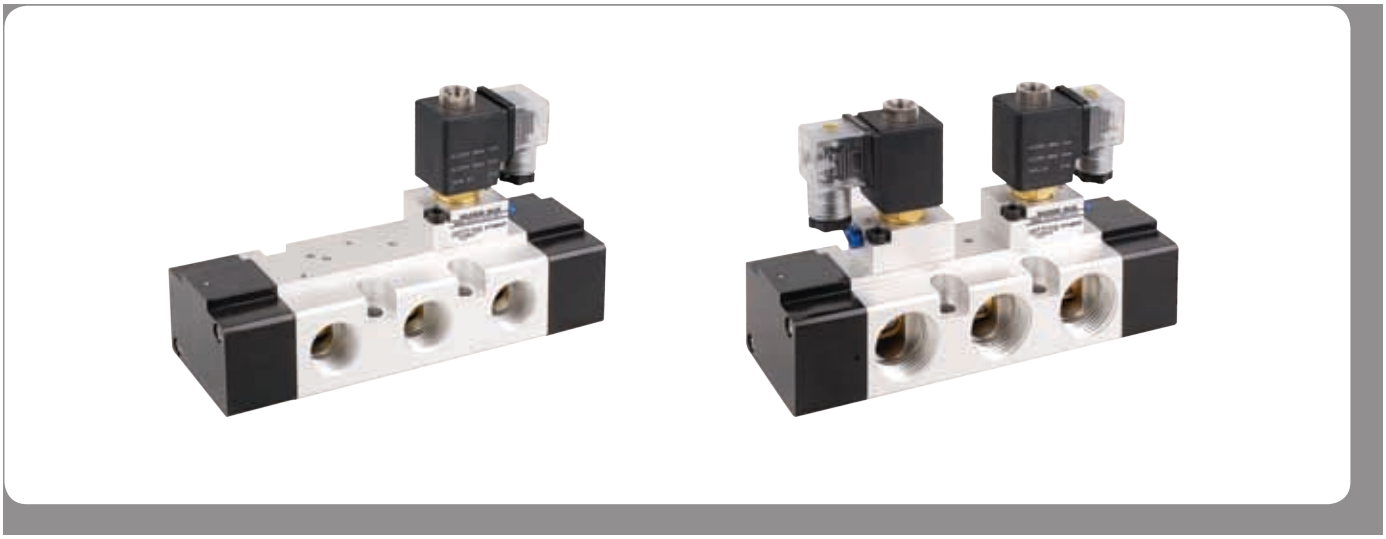

B

## 订购码 | Ordering Code

| MVSD | - | 600 | - | 4 | E2 | 25A | - | AC110V | - | L |
|---|---|---|---|---|---|---|---|---|---|---|
| 型号<br>Model | | 本体宽度<br>Body size | | 3:3方向<br>4:4方向<br>3:Three Way<br>4:Four Way | E1:单线圈<br>E2:双线圈<br>E1:Single Coil<br>E2:Double Coil | 接管口径代号<br>Port size<br>15A:PT1/2<br>20A:PT3/4<br>25A:PT1 | | 标准电压<br>Standard Voltage<br>DC24V<br>AC110V 50Hz/60Hz<br>AC220V 50Hz/60Hz | | 接线形式<br>空白：DIN端子型<br>L：**附灯型**<br>Wiring Form<br>Blank:DIN Connector<br>L:With Lighting Type |

## 规格 | Specification

| 型号 Model | MVSD-600-4E1 | MVSD-600-4E2 |
|---|---|---|
| 接管口径代号 Joint Pipe Bore Code | 15A,20A, 25A | |
| 接管口径 Joint Pipe Bore | PT1/2,PT3/4, PT1 | |
| 位通数 Position Way No. | 二位五通 Two-position Five-way | |
| 使用压力范围 Pressure Range | 0.2～0.7MPa | |
| 耐压力 Pressure Resistance | 1.0MPa | |
| 有效断面积 Effective Section Area | 20A: 115mm$^2$， 25A:135mm$^2$ | |
| 应答时间 Answer Time | 80ms | |
| 使用流体 Operating Fluid | 空气 Air | |
| 工作温度 Working Temperature | -5～50℃（**不冻结** No Freezing） | |
| 标准电压 Standard Voltage | AC: 110V, 220V (50/60)Hz DC: 24V | |
| 耗电量 Power Consumption | AC: 13/11VA DC: 10W | |
| 电压范围 Voltage Range | ±10% | |
| 绝缘级数 Insulation Class | H级 H Class | |
| 重量 Weight | 1817g | 2102g |

# MVSD-600系列电磁阀
MVSD-600 Series Solenoid Valve

## 外形尺寸 | Overall Dimension

MVSD-600-4E1

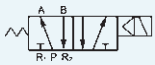


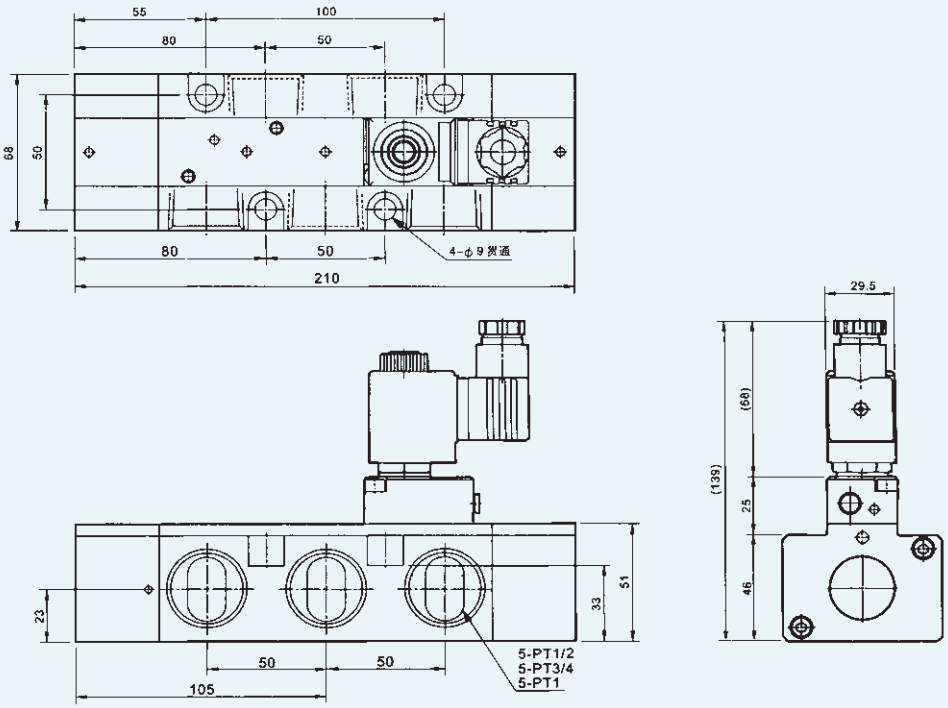


MVSD-600-4E2

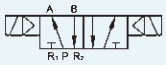


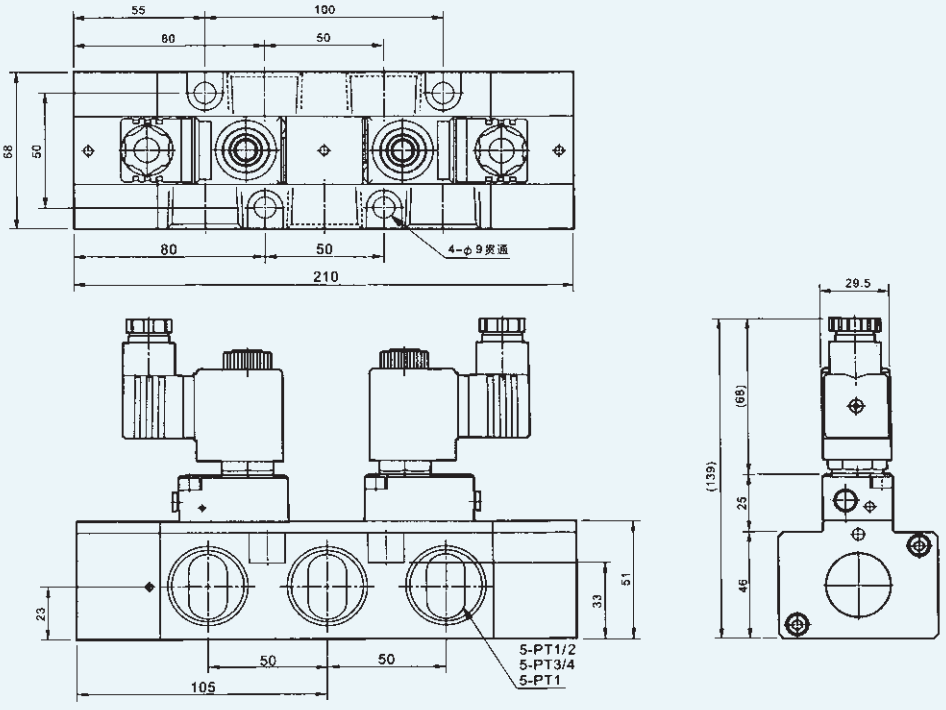

# 2W(UD)系列电磁阀
## 2W(UD) Series Solenoid Valve

## 订购码 | Ordering Code

| 2W | 025 | – | 06 | NO | AC110V | E |
|---|---|---|---|---|---|---|

**2W**
规格代码
2W：二位二通电磁阀（直动式）
2S:不锈钢二位二通电磁阀（直动式）
**Model**
2W: Two position two way solenoid valve(direct drive type)
2S: Stainless steel two position two way solenoid valve(direct drive type)

**025**
流量孔径
**Aperture of Flow Rate**
012: 1.2mm
020: 2.0mm
025: 2.5mm
040: 4.0mm

**06**
接管口径
**Port size**
06: 1/8″
08: 1/4″
10: 3/8″

**NO**
初始状态
空白：常闭型
NO：常开型
**Initial situation**
Blank: Normal Close
NO:Normal Open

**AC110V**
标准电压
**Standard Voltage**
DC12V
DC24V
AC24V 50/60Hz
AC36V 50/60Hz
AC110V 50/60Hz
AC220V 50/60Hz
AC380V 50/60Hz

**E**
油封代号
空白：NBR
V:VITON(高温用)
E:EPDM (蒸汽用)
**Seals**
Blank: NBR
V: VITON(for high-temperature)
E:EPDM (for steam)

## 图形符号 | Graphic Symbol

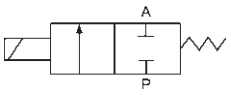

常闭/Normal Close

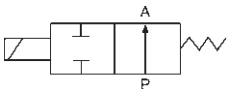

常开/Normal Open

## 规格 | Specification

| 型 号 Model | 2W025-06 2S025-06 | 2W025-08 2S025-08 | 2W040-10 2S040-10 | 2WH012-06 2SH012-06 | 2WH012-08 2SH012-08 | 2WH020-10 2SH020-10 |
|---|---|---|---|---|---|---|
| 工作介质 Working Medium | 空气、水、油、瓦斯 Air, Water, Oil, Gas | | | | | |
| 动作方式 Motion Pattern | 直动式 Direct Drive Type | | | | | |
| 型式 Type | 常闭型 Normal Close Type ； 常开型 Normal Open Type | | | | | |
| 流量孔径 mm Aperture of Flow Rate | 2.5 | | 4.0 | 1.2 | | 2.0 |
| CV值 CV Value | 0.23 | | 0.60 | 0.05 | | 0.15 |
| 接管口径 Joint Pipe Bore | G1/8″ | G1/4″ | G3/8″ | G1/8″ | G 1/4″ | G 3/8″ |
| 使用流体粘滞度 Operation Fluid Viscosity | 20 CST以下 (Below) | | | | | |
| 使用压力 Working-pressure | 0~0.7MPa | | | 0~2.0MPa | | |
| 最大耐压力 Max. Pressure Resistance | 1.0MPa | | | 3.5MPa | | |
| 工作温度范围 Operating Temperature Range | -5~+80℃ | | | | | |
| 使用电压范围 Voltage Range | ±10% | | | | | |
| 本体材质 Material of Body | 2W：黄铜 Brass ； 2S：不锈钢 Stainless Steel | | | | | |
| 油封材质 Material of Oil Seal | NBR, EPDM或VITON / NBR, EPDM or VITON | | | | | |

x特殊电压及特殊规格请与厂方接洽 Please contact Factory for special voltage and Specification.

B

# 2W(UW)系列电磁阀(大口径)
2W(UW) Series Solenoid Valve (Large Aperture)

## 订购码 | Ordering Code

**2W** | **160** | – | **15** | **NO** | **AC110V** | **V**

规格代码
2W：二位二通电磁阀（直动式）
2S ：不锈钢二位二通电磁阀（直动式）
**Model**
2W:two position two way solenoid valve(direct drive type)a
2S:stainless steel two position two way solenoid valve(direct drive type)

流量孔径
**Aperture of Flow Rate**
160: 16mm
200: 20mm
250: 25mm
350: 35mm
400: 40mm
500: 50mm

接管口径
**Port size**
10: 3/8″
15: 1/2″
20: 3/4″
25: 1″
35: $1\frac{1}{4}$″
40: $1\frac{1}{2}$″
50: 2″

初始状态
空白：常闭型
NO：常开型
**Initial Situation**
Blank: Normal Close
NO:Normal Open

标准电压
**Standard Voltage**
DC12V
DC24V
AC24V 50/60Hz
AC36V 50/60Hz
AC110V 50/60Hz
AC220V 50/60Hz
AC380V 50/60Hz

油封代号
空白：NBR
V:VITON(高温用)
**Seals**
Blank: NBR
V: VITON(for high-temperature)

## 图形符号 | Graphic Symbol

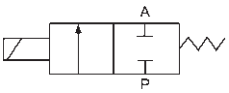

常闭/Normal Close

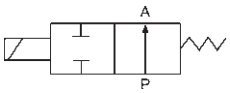

常开/Normal Open

## 规格 | Specification

| 型 号 Model | 2W160-10 2S160-10 | 2W160-15 2S160-15 | 2W200-20 2S200-20 | 2W250-25 2S250-25 | 2W350-35 2S350-35 | 2W400-40 2S400-40 | 2W500-50 2S500-50 |
|---|---|---|---|---|---|---|---|
| 工作介质 Working Medium | 空气、水、油、瓦斯 Air, Water, Oil, Gas | | | | | | |
| 动作方式 Motion Pattern | 直动式 Direct Drive Type | | | | | | |
| 型式 Type | 常闭型 Normal Close Type ; 常开型 Normal Open Type | | | | | | |
| 流量孔径 mm Aperture of Flow Rate | 16 | 16 | 20 | 25 | 35 | 40 | 50 |
| CV值 CV Value | 4.8 | 4.8 | 7.6 | 12 | 24 | 29 | 48 |
| 接管口径 Joint Pipe Bore | G3/8″ | G1/2″ | G3/4″ | G1″ | $G1\frac{1}{4}$″ | $G1\frac{1}{2}$″ | G2″ |
| 使用流体粘滞度 Operation Fluid Viscosity | 20 CST以下 (Below) | | | | | | |
| 使用压力 Working-pressure | 水 Water : 0~0.5MPa; 空气 Air : 0~0.7MPa; 油 Oil : 0~0.5MPa; 瓦斯 Gas : 0~0.7MPa | | | | | | |
| 最大耐压力 Max. Pressure Resistance | 1.05MPa | | | | | | |
| 工作温度范围 Operating Temperature Range | -5~+80℃ | | | | | | |
| 使用电压范围 Voltage Range | ±10% | | | | | | |
| 本体材质 Material of Body | 2W: 黄铜 Brass ; 2S: 不锈钢 Stainless Steel | | | | | | |
| 油封材质 Material of Oil Seal | NBR, EPDM或VITON / NBR, EPDM or VITON | | | | | | |

*特殊电压及特殊规格请与厂方接洽 Please contact Factory for special voltage and Specification.

# 2W(UW)系列电磁阀(大口径)
2W(UW) Series Solenoid Valve (Large Aperture)

## 外形尺寸 | Overall Dimension

**2W025-06**

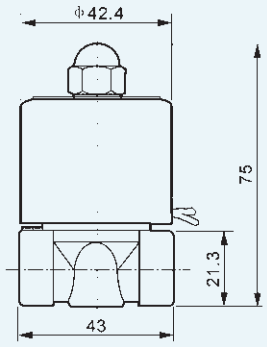


**2WH012-06**

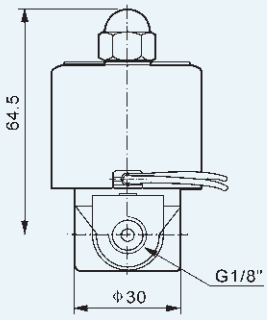


**2W025-08**

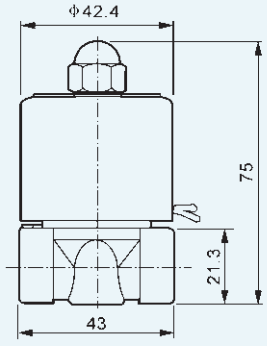


**2WH012-08**

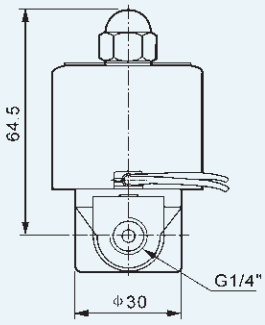


**2W040-10**

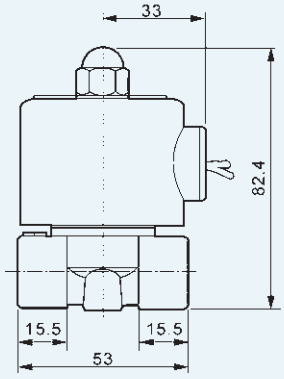


**2WH020-10**

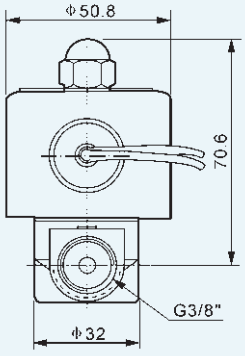


**2W大口径 Large Aperture**

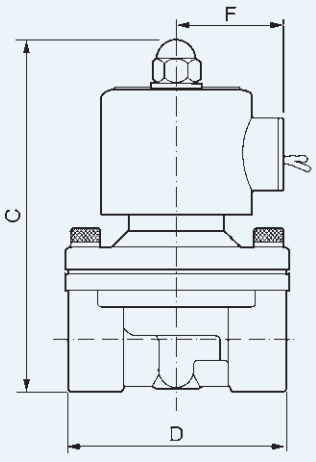


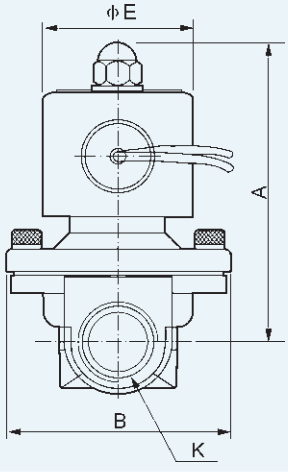


## 尺寸表 | Dimension Sheet

| 型 号 Model | A | B | C | D | E | F | K |
|---|---|---|---|---|---|---|---|
| 2W160-10 | 101.5 | 57 | 117 | 69 | 50 | 36 | G3/8 |
| 2W160-15 | 101.5 | 57 | 117 | 69 | 50 | 36 | G1/2 |
| 2W200-20 | 107 | 57 | 123.5 | 73 | 50 | 36 | G3/4 |
| 2W250-25 | 111.5 | 73.5 | 134.5 | 99 | 50 | 36 | G1 |
| 2W350-35 | 142 | 95 | 172 | 123 | 70.5 | 56 | G1¼ |
| 2W400-40 | 142 | 95 | 172 | 123 | 70.5 | 56 | G1½ |
| 2W500-50 | 172 | 123 | 209 | 168 | 70.5 | 56 | G2 |

# 2L(US)系列电磁阀
2L(US) Series Solenoid Valve

## 订购码 | Ordering Code

**2L** – **170** – **15** – **AC110V**

**2L**
规格代码
2L:蒸汽型二位二通电磁阀
**Model**
2L: Steaml Valve

**170**
流量孔径
**Aperture of Flow Rate**
170: 17mm
200: 22mm
300: 30mm
500: 50mm

**15**
接管口径
**Port size**
10: 3/8″
15: 1/2″
20: 3/4″
25: 1″
35: 1 1/4″
40: 1 1/2″
50: 2″

**AC110V**
标准电压
**Standard Voltage**
DC12V
DC24V
AC24V 50/60Hz
AC36V 50/60Hz
AC110V 50/60Hz
AC220V 50/60Hz
AC380V 50/60Hz

## 图形符号 | Graphic Symbol

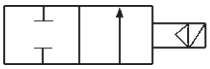

## 规格 | Specification

| 型 号 Model | 2L170-10 | 2L170-15 | 2L170-20 | 2L200-25 | 2L300-35 | 2L300-40 | 2L500-50 |
|---|---|---|---|---|---|---|---|
| 工作介质 Working Medium | 空气、水、油、瓦斯 Air, Water, Oil, Gas | | | | | | |
| 动作方式 Motion Pattern | 直动式 Direct Drive Type | | | | | | |
| 型式 Type | 常闭型 Normal Close Type | | | | | | |
| 流量孔径 mm Aperture of Flow Rate | 17 | | | 22 | 30 | | 50 |
| CV值 CV Value | 4.8 | | | 12 | 20 | | 48 |
| 接管口径 Joint Pipe Bore | G3/8” | G1/2” | G3/4” | G1” | G1 1/4” | G1 1/2” | G2” |
| 使用流体粘滞度 Operation Fluid Viscosity | 20 CST以下 (Below) | | | | | | |
| 使用压力 Working-pressure | 0.1~1.5MPa | | | | | | |
| 最大耐压力 Max. Pressure Resistance | 2.25MPa | | | | | | |
| 工作温度范围 Operating Temperature Range | -5~+80℃ | | | | | | |
| 使用电压范围 Voltage Range | ±10% | | | | | | |
| 本体材质 Material of Body | 黄铜 Brass | | | | | | |
| 油封材质 Material of Oil Seal | 聚四氟乙烯 PTFE | | | | | | |

x特殊电压及特殊规格请与厂方接洽 Please contact Factory for special voltage and Specification.

# 2L(US)系列电磁阀
2L(US) Series  Solenoid Valve

## 外形尺寸 | Overall Dimension

### 2L Series

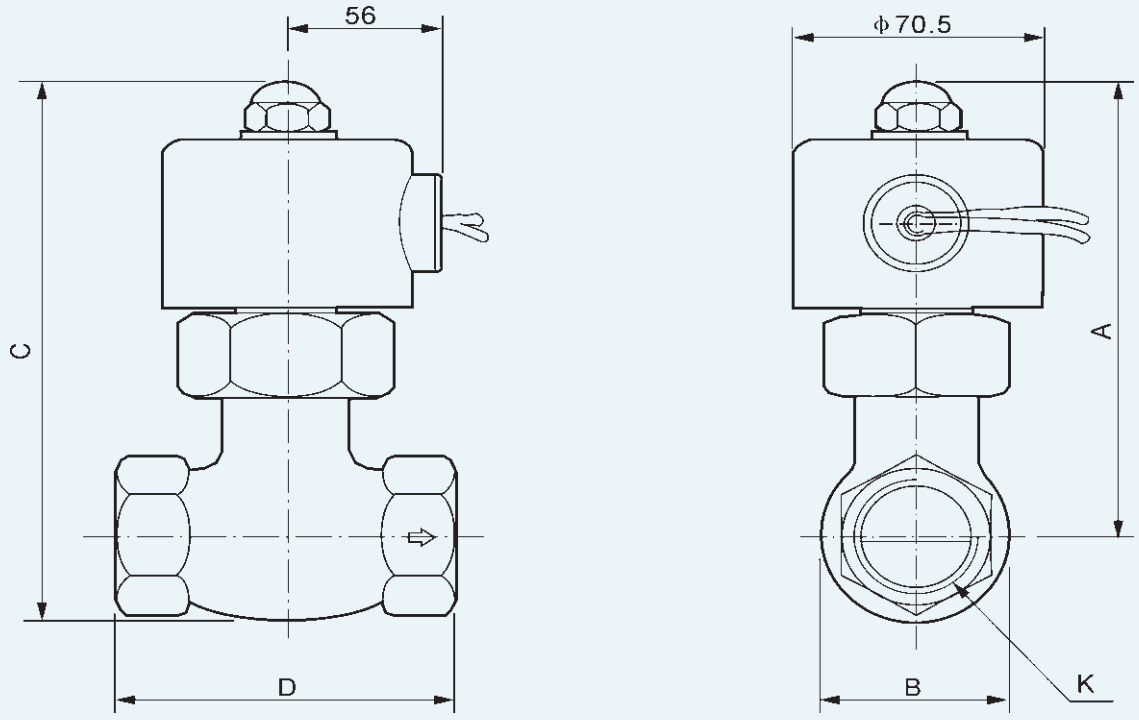


## 尺寸表 | Dimension Sheet

| 型 号 Model | A | B | C | D | K |
|---|---|---|---|---|---|
| 2L170-10 | 125 | 42 | 146 | 82 | G3/8 |
| 2L170-15 | 125 | 42 | 146 | 82 | G1/2 |
| 2L170-20 | 125 | 42 | 146 | 82 | G3/4 |
| 2L200-25 | 136 | 52 | 162 | 90.5 | G1 |
| 2L300-35 | 148 | 74 | 185 | 111 | G1¹/4 |
| 2L300-40 | 148 | 74 | 185 | 111 | G1¹/2 |
| 2L500-50 | 176 | 86 | 223 | 163 | G2 |

# PU系列电磁阀
PU Series Solenoid Valve

## 订购码 | Ordering Code

| PU | 220 | – | 01 | – | AC110V | E |
|---|---|---|---|---|---|---|

规格代码
PU:二位二通电磁阀
**Model**
PU: Two-position Two-way Solenoid Valve

动作方式
220: 直动式
225:先导式
**Motion Pattem**
220:Direct drive
225:Pilot Type

接管口径
**Port size**
01: 1/8″ 08: 1″
02: 1/4″ 12: 1 1/4″
03: 3/8″ 14: 1 1/2″
04: 1/2″ 20: 2″
06: 3/4″

标准电压
**Standard Voltage**
DC12V
DC24V
AC24V 50/60Hz
AC36V 50/60Hz
AC110V 50/60Hz
AC220V 50/60Hz
AC380V 50/60Hz

油封代号
空白：NBR
E:EPDM
V: VITON
**Seals**
Blank: NBR
E:EPDM
V: VITON

## 图形符号
Graphic Symbol

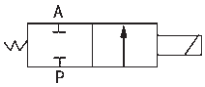


## 规格 | Specification

| 型 号 Model | PU220-01 | PU220-02 | PU220-03 | PU220-04 | PU220-06 | PU220-08 |
|---|---|---|---|---|---|---|
| 工作介质 Working Medium | 空气、水、油 Air, Water, Oil | | | | | |
| 动作方式 Motion Pattern | 220: 直动式 Direct Drive Type 225: 先导式 Guide Type | | | | | |
| 型式 Type | 常闭型 Normal Close Type | | | | | |
| 流量孔径 mm Aperture of Flow Rate | 1.5 | 2.3 | 8 | 13 | 20 | 25 |
| CV值 CV Value | 0.10 | 0.18 | 1.00 | 4.00 | 8.60 | 11.00 |
| 接管口径 Joint Pipe Bore | G1/8″ | G1/4″ | G3/8″ | G1/2″ | G3/4″ | G1″ |
| 使用流体粘滞度 Operation Fluid Viscosity | 50 CST | | | | | |
| 使用压力 Working-pressure | 0~0.7MPa | | | | | |
| 最大耐压力 Max. Pressure Resistance | 1.05MPa | | | | | |
| 工作温度 Operating Temperature | -5~+80℃ | | | | | |

x特殊电压及特殊规格请与厂方接洽 Please contact Factory for special voltage and Specification.

## 外形尺寸 | Overall Dimension

### PU Series

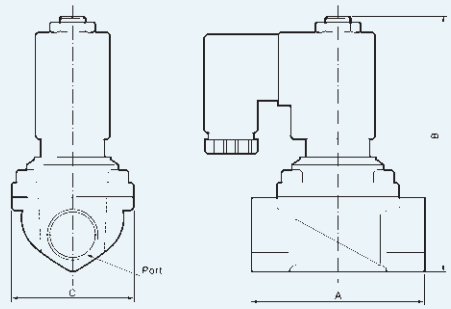


## 尺寸表 | Dimension Sheet

| 型 号 Model | 口径 Bore | A | B | C |
|---|---|---|---|---|
| PU220-01 | G1/8″ | 22 | 72 | 22 |
| PU220-02 | G1/4″ | 35 | 75.5 | 25.4 |
| PU220-03 | G3/8″ | 55 | 79.5 | 30 |
| PU220-04 | G1/2″ | 66.5 | 101 | 48 |
| PU220-06 | G3/4″ | 71 | 107 | 48 |
| PU220-08 | G1″ | 96 | 120 | 70 |

# 二位二通活塞式多介质角座阀系列

2/2 way Piston-operated angle-seat valves for neutral and aggressive liquids and gases

## 订购码 | Ordering Code

**JZF - 15 D**

- JZF：规格代码 Model
  JZF: 角座阀
  JZF: Angle Seat Valve
- 15：公称通径 Orifice Size (mm)
  15,20,25,32,40,50
- D：阀体材料 Body Material
  D：锡青铜
  D:Tin bronze
  空白：不锈钢
  Blank: Stainless Steel

## 图形符号 | Graphic Symbol

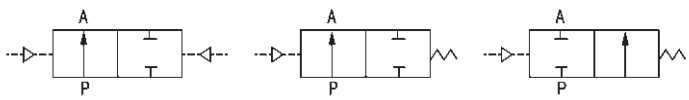


双作用型 Double-acting　　常闭型 Normally Closed　　常开型 Normally Open

## 规格 | Specification

| 公称通径 Orifice Size (mm) | 接管螺纹（螺纹型） Port Connection (G) | Kv值 Kv Value ($m^3/h$) | 最大工作压力 Max. Working Pressure (MPa) | 要求最小控制压力 Min.pilot Pressure (MPa) | 聚酰胺 Polyamide | 介质温度 Medium Temperature | 流向 Flow direction |
|---|---|---|---|---|---|---|---|
| 15 | G1/2″ | 4.2 | 0~1.6 | 0.39 | 50 | -10~+180℃ | A向或B向 A(flow direction below the seat) or B(flow direction above the seat) |
| 20 | G3/4″ | 8 | 0~1.1 | 0.39 | 50 | | |
| 25 | G1″ | 19 | 0~1.1 | 0.42 | 63 | | |
| 32 | G1 1/4″ | 27.5 | 0~1.5 | 0.5 | 63 | | |
| 40 | G1 1/2″ | 42 | 0~1.25 | 0.44 | 63 | | |
| 50 | G2″ | 55 | 0~1.0 | 0.4 | 80 | | |

## 安装与维修 | Installation & Maintenance

必须遵守适用的安全规范：

1. 管道必须清洁无污染。
2. 根据需要安装，但最好使执行机构朝上。注意流向。
3. 连接阀门注意对准管道，只有在用户特殊要求时才取下执行机构。
4. 打开或维修该角座阀之前先切断流体和控制气源并降低管道系统中的压力。

1 Clean the pipes carefully from any residue, dribble or welding residue, to avoid any damage to the seal.
2 To be installed as required, preferably with actuator in upright position
3 Connect the pipes according to the reference points (flow direction) found on the valve body.Only disassemble the actuator if required by customer.
4 Before taking the valve apart, depressurize the media supply and pilot air supply piping system.

B

# 二位二通活塞式多介质角座阀系列

**2**/2 way Piston-operated angle-seat valves for neutral and aggressive liquids and gases

**内部结构**

**Inside Structure**

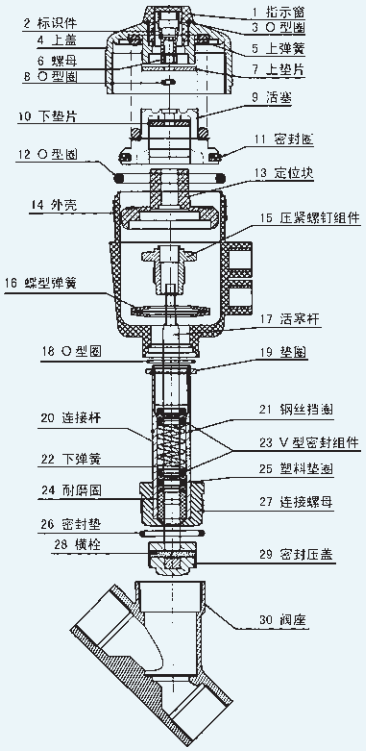


**外形图 Overall Chart**

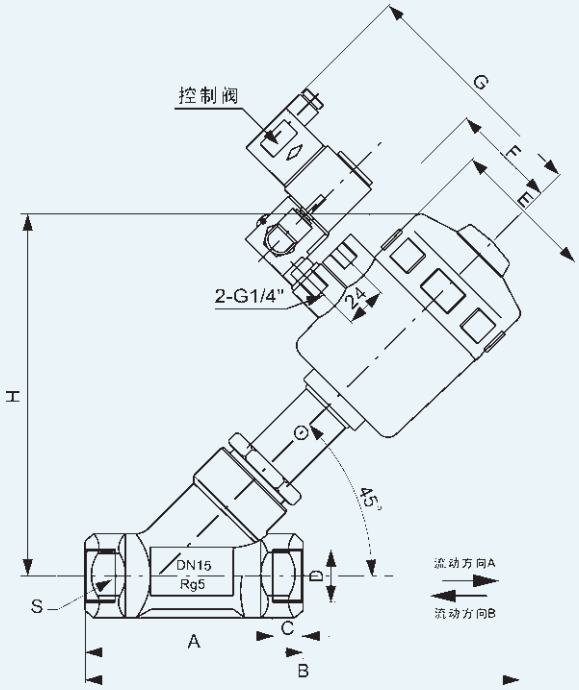


## 尺寸表 | Dimension Sheet

| 公称通径 Orifice Size (mm) | 接管螺纹 Port Connection D | 执行器尺寸 Actuator size (Φmm) | | A | B | | C | ΦE | | F | | G | | H | | L | S |
|---|---|---|---|---|---|---|---|---|---|---|---|---|---|---|---|---|---|
| | | 聚酰胺 Polyamide | 铝合金 Aluminum Alloy | | 聚酰胺 Polyamide | 铝合金 Aluminum Alloy | | 聚酰胺 Polyamide | 铝合金 Aluminum Alloy | 聚酰胺 Polyamide | 铝合金 Aluminum Alloy | 聚酰胺 Polyamide | 铝合金 Aluminum Alloy | 聚酰胺 Polyamide | 铝合金 Aluminum Alloy | | |
| 15 | G1/2″ | 50 | - | 85 | 173 | - | 12 | 64 | - | 44 | - | 112 | - | 137 | - | 33 | 27 |
| 20 | G3/4″ | 50 | - | 95 | 178 | - | 12 | 64 | - | 44 | - | 112 | - | 145 | - | 35 | 32 |
| 25 | G1″ | 63 | - | 105 | 212 | - | 14 | 80 | - | 52 | - | 120 | - | 173 | - | 40 | 41 |
| 32 | G1¼″ | 63 | 100 | 118 | 236 | 276 | 16 | 80 | 140 | 52 | 70 | 120 | 138 | 189 | 250 | 35 | 55 |
| 40 | G1½″ | 63 | 100 | 130 | 230 | 270 | 18 | 80 | 140 | 52 | 70 | 120 | 138 | 189 | 250 | 35 | 55 |
| 50 | G2″ | 80 | 125 | 150 | 238 | 300 | 20 | 100 | 170 | 52 | 83 | 120 | 151 | 250 | 260 | 38 | 70 |

## 注意 | Notice

### 选择流动方向A时的特点：

1. 选择该流动方向时，可提高该产品的使用寿命。
2. 当工作介质为液体时，选择该流向可防水锤冲击。
3. 通径为Φ15 /Φ20 /Φ25的产品，工作压力须在0.3MPa以下，否则须选择双作用执行器。

通径为Φ32 /Φ40 的产品，执行器须选择双作用Φ100 尺寸。

通径为Φ50 的产品，执行器须选择双作用Φ125 尺寸。

### 选择流动方向B时的特点：

当工作介质为蒸汽或气体时，选择该流动方向时，可提高该产品的流体密封性能，但由于阀体中V型密封圈长时间接触工作介质，从而对产品使用寿命有一定影响，另外，工作介质为液体时不防水锤冲击。

### Flow direction below the seat (direction A)

1,Valves with flow direction below the seat (direction A) ensure long service life.
2,Valves used for liquid media are waterhammer-free.
3,Valves with orifice DN15/DN20/DN25 are ideal for the operating pressure of 0.3Mpa.
Vavles with orifice DN32/DN40 are operated with double-acting actuators DN100.
Valves with orifice DN50 are operated with double-acting actuators DN125.

### Flow direction above the seat (direction B)

Valves with dirction B provide high sealing integrity, used for steam and gases media. There is a danger of waterhammer ,when the valves used for liquid media.

# MOV系列机械阀
MOV Series Mechanical Valve

## 订购码 | Ordering Code

**MOV** – **01**

规格代码
机械阀
**Specification Code**
Mechanical valve

按钮形式
01：选择型旋钮
02：滚轮型
03：连锁型按钮
04：平圆型按钮
**Button Type**
01：Selective Knob
02：Roller Type
03：With Lock Button
04：Plat Round Button

## 规格 | Specification

| 型 号<br>Model | MOV-01 | MOV-02 | MOV-03 | MOV-04 |
|---|---|---|---|---|
| 工作介质<br>Working Medium | 空气 / Air | | | |
| 使用压力范围<br>Working-pressure Range | 0 ~ 0.8MPa | | | |
| 使用温度范围<br>Operating Temperature Range | 0 ~ 70℃ | | | |
| 位通数<br>Position and Way Number | 二位三通 / Two-position Three-way | | | |
| 接管口径<br>Joint Pipe Bore | G1/8″ | | | |

## 外形尺寸 | Overall Dimension

M0V-01

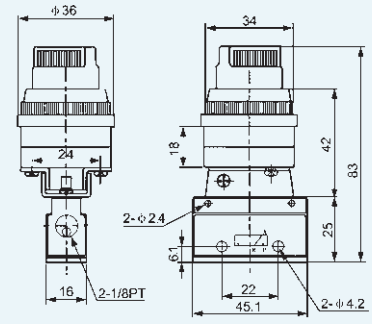


M0V-02

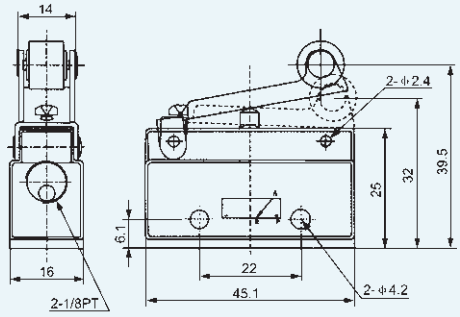


M0V-03

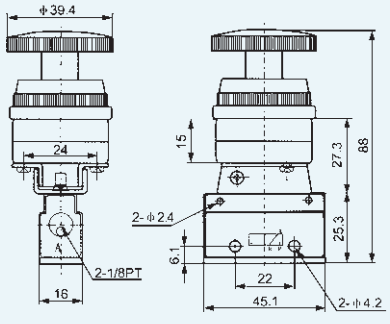


M0V-04

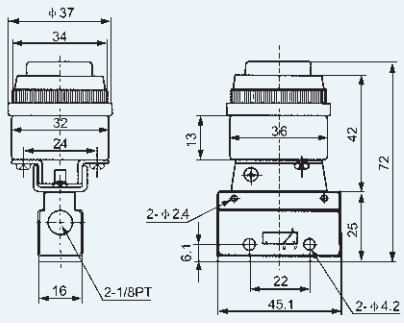


B

# JM系列机械阀
JM Series Mechanical Valve

## 订购码 | Ordering Code

**JM** – **05**

规格代码
截止式机械阀
**Model**
Stop-type Mechanical Valve

按钮形式 **Button Type**
05：选择型旋钮　Selective Knob
06：连锁型按钮　With Lock Button
06A：平圆型按钮　Plat Round Button
07：滚轮型　Roller Type

## 规格 | Specification

| 型 号 Model | JM-05 | JM-06 | JM-06A | JM-07 |
|---|---|---|---|---|
| 工作介质 Working Medium | 经40微米过滤的空气　40 Micron Filtered Air | | | |
| 位通数 Position and Way NO. | 二位三通　Two-position Three-way | | | |
| 接口口径 Joint Pipe Bore | G1/4″ | | | |
| 使用压力范围 Working-pressure Range | 0~0.8MPa | | | |
| 使用温度范围 Operating Temperature | 0~60℃ | | | |

## 外形尺寸 | Overall Dimension

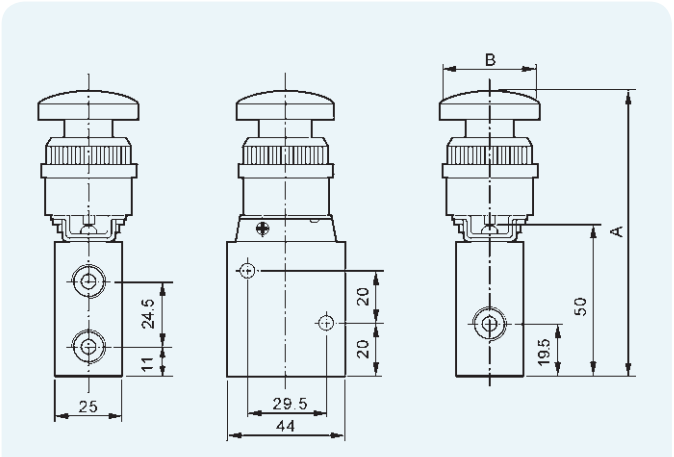


## 尺寸表 | Dimension Sheet

| 型 号 Model | A | B |
|---|---|---|
| JM-05 | 114 | 36.5 |
| JM-06 | 111 | 39.5 |
| JM-06A | 96 | 39.5 |
| JM-07 | 84.5 | 42.5 |

# MSV系列机械阀
MSV Series Mechanical Valve

B

## 订购码 | Ordering Code

| MSV | 86 | 32 | 1 | R |
|---|---|---|---|---|
| 规格代码<br>机械阀<br>**Model**<br>Mechanical Valve | 系列代号<br>86系列<br>98系列<br>**Body size**<br>86 Series<br>98 Series | 位通数<br>32: 二位三通<br>52: 二位五通<br>**Position and Way NO.**<br>32:Two-position Three-way<br>52:Two-position Five-way | 接口口径<br>**Port size**<br>1: G1/8″<br>2: G1/4″ | 按钮形式 **Button Type**<br>空白:基本型 Blank: Basic Type<br>R: 滚轮型 Roller Type<br>TB: 选择型旋钮 Selective Knob<br>LB: 加长型旋钮 Strengthened Knob<br>PB: 大圆型按钮 Large Round Button<br>PP: 平圆型按钮 Plat Round Button<br>PPL:凸圆型按钮 Convex Round Button<br>EB: 带锁型按钮 With Lock Button |

## 规格 | Specification

| 型 号 Model | MSV86321 | MSV86522 | MSV98322 |
|---|---|---|---|
| 工作介质<br>Working Medium | 经40微米过滤的空气 40 Micron Filtered Air | | |
| 位通数<br>Position and Way NO. | 二位三通 Two-position Three-way | 二位五通 Two-position Five-way | 二位三通 Two-position Three-way |
| 有效截面积<br>Effective Sectional Area | 12mm$^2$(CV=0.67) | 16mm$^2$(CV=0.89) | 16mm$^2$(CV=0.89) |
| 接口口径<br>Joint Pipe Bore | G1/8″ | G1/4″ | G1/4″ |
| 使用压力范围<br>Working-pressure Range | 0~0.8MPa | | |
| 使用温度范围<br>Operating Temperature | 0~60℃ | | |

# 机 械 阀
Mechanical Valve

## 外形尺寸 | Overall Dimension

### MSV86522

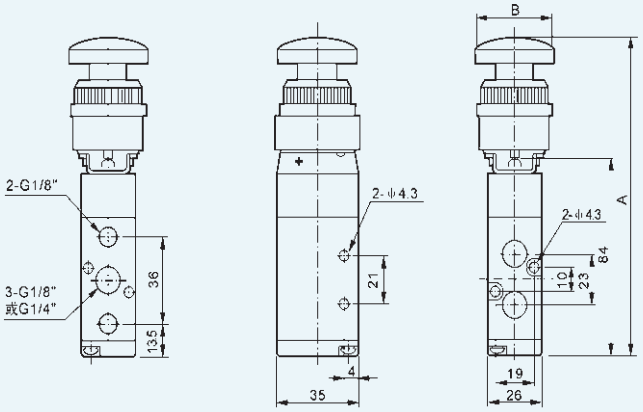


### MSV98322

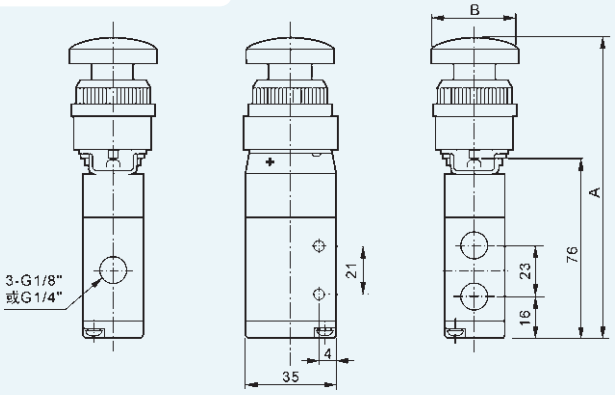


### MSV86321

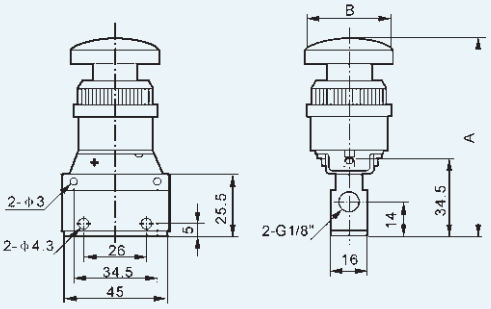


## 尺寸表 | Dimension Sheet

| 系列 Series | 符号 / 型号 Symbol / Model | PP | PPL | LB | TB | EB | PB | R |
|---|---|---|---|---|---|---|---|---|
| MSV86522 | A | 114 | 119 | 133 | 136.5 | 134 | 131 | 107.5 |
| | B | 39.5 | 24.5 | 26.5 | 36.5 | 39.5 | 37.5 | 42.5 |
| MSV98322 | A | 106 | 111 | 125 | 129.5 | 126 | 123 | 99.5 |
| | B | 39.5 | 24.5 | 26.5 | 36.5 | 39.5 | 37.5 | 42.5 |
| MSV86321 | A | 66 | 71 | 85 | 88.5 | 86 | 83 | 59.5 |
| | B | 39.5 | 24.5 | 26.5 | 36.5 | 39.5 | 37.5 | 42.5 |

**PP**

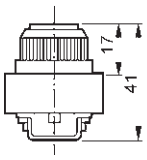


**PPL**

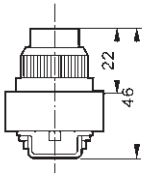


**TB**

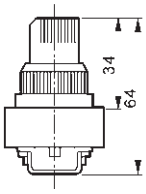


**LB**

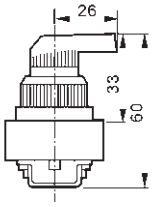


**PB**

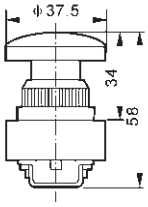


**EB**

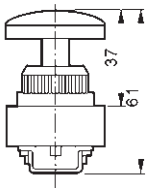


**R**

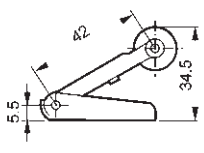

# 脚踏阀
Foot Valve

## 订购码 | Ordering Code

**4F** — 规格代码
4F:二位五通脚踏阀
**Model**
4F: Two-position Five-way Foot Valve

**2** — 系列代号
2:200系列
**Series Code**
2: 200 Series

**10** — 位置数
10:单头双位置
**Motion Pattem**
10: Single-head Double-position

**–**

**08** — 接管口径
**Port size**
08: G1/4″

**FV** — 规格代码
脚踏阀
**Model**
Foot Valve

**–**

**320** — 位通数
320:二位三通
420:三位四通
**Position and Way NO.**
320: Two-position Three-way
420: Two-position Four-way

## 规格 | Specification

| 型 号 Model | 4F210-08 | 4F210-08L | 4F210-08G | 4F210-08LG | FV420 | FV320 |
|---|---|---|---|---|---|---|
| 工作介质 Working Medium | 经40微米过滤的空气 40 Micron Filtered Air | | | | | |
| 位通数 Position and Way NO. | 二位五通 Two-position Five-way | | | | 二位四通 Two-position Four-way | 二位三通 Two-position Four-way |
| 动作形式 Motion Patten | 直动式 Direct Drive Type | | | | | |
| 接口口径 Joint Pipe Bore | 进气＝出气＝排气＝G1/4″ Air Inlet=Air Outlet=Exhaust=G1/4″ | | | | 进气＝出气＝G1/4″ 排气＝G1/8″ Air Inlet=Air Outlet=G1/4″ Exhaust=G1/8″ | |
| 使用压力范围 Working-pressure Range | 0~0.8MPa | | | | | |
| 使用温度范围 Operating Temperature Range | 0~60℃ | | | | | |

B

# 脚 踏 阀
Foot Valve

## 外形尺寸 | Overall Dimension

### 4F210-08

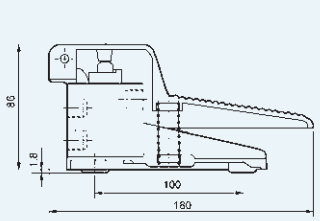


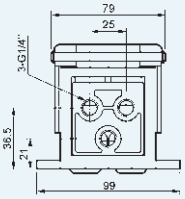


### 4F210-08L

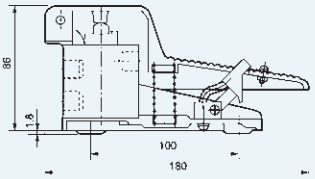


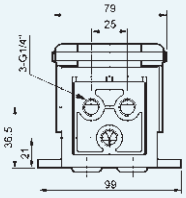


### 4F210-08G

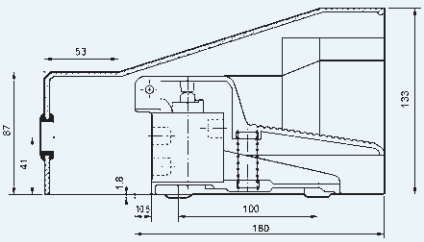


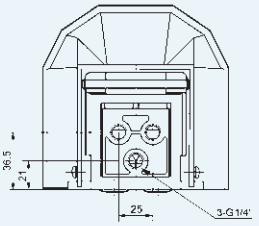


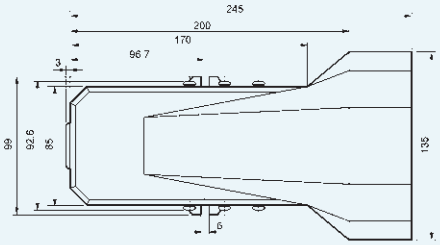


### 4F210-08LG

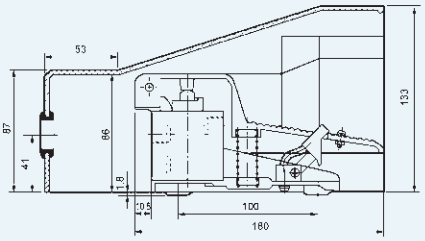


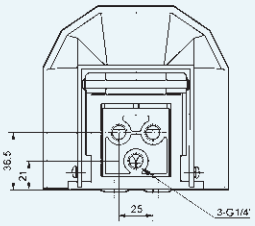


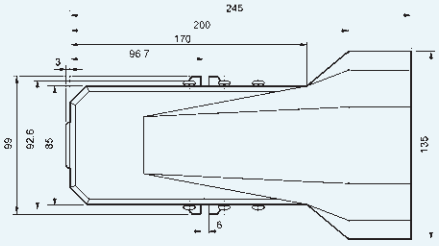

# 脚 踏 阀
Foot Valve

## 外形尺寸 | Overall Dimension

### FV420

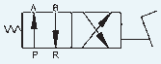

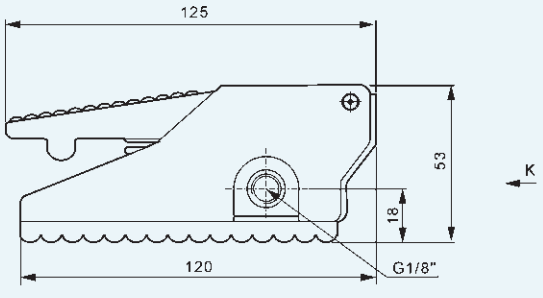


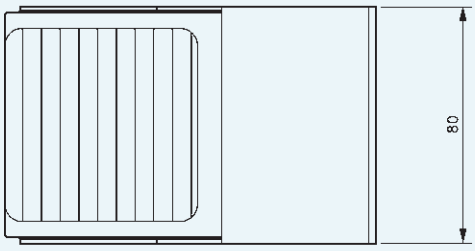


### FV320

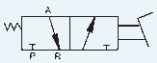

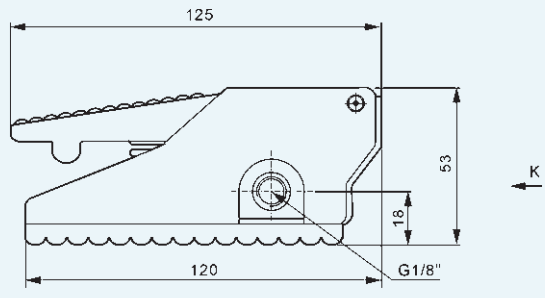


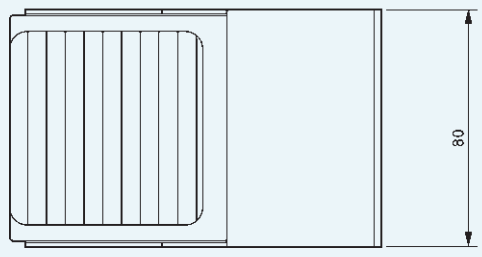


B

# 手扳阀
Hand Level Valve

## 订购码 | Ordering Code

**4H** **2** **10** – **06** – **L**

**4H**
规格代码
4H:二(三)位五通
**Model**
4H: Two(Three)-position Five-way

**2**
系列代号
2:200系列
3:300系列
4:400系列
**Body size**
2: 200 Series
3: 300 Series
4: 400 Series

**10**
位置数
10:单头双位置
30:单头三位置
**Motion Pattem**
10: Single-head Double-position
30: Single-head Three-position

**06**
接管口径
**Port size**
06: G1/8″
08: G1/4″
10: G3/8″
15: G1/2″

**L**
形式代号
空白：三位五通复位型
L:三位五通锁型
**Type Code**
Blank:Three-position Five-way Reset Type
L:Three-position Five-way Locking Type

## 规格 | Specification

| 型 号 Model | 4H210-06 | 4H210-08 | 4H230-08 | 4H310-08 | 4H310-10 | 4H410-15 |
|---|---|---|---|---|---|---|
| 工作介质<br>Working Medium | 经40微米过滤的空气　40 Micron Filtered Air | | | | | |
| 动作方式<br>Motion Pattern | 直动式　Direct Drive Type | | | | | |
| 有效截面积<br>Effective Section Area | 14mm$^2$(CV=0.78) | 16mm$^2$(CV=0.89) | 12mm$^2$(CV=0.67) | 25mm$^2$(CV=1.4) | 30mm$^2$(CV=1.68) | 50mm$^2$(CV=2.79) |
| 接口口径<br>Joint Pipe Bore | 进气=出气=排气=G1/8″<br>Air Inlet=Air Outlet=Exhaust =G1/8 ″ | 进气=出气=G1/4″　排气=G1/8″<br>Air Inlet=Air Outlet=G1/4″ | | 进气=出气=排气=G1/4″<br>Air Inlet=Air Outlet=Exhaust =G1/4″ | 进气=出气=G1/8″<br>Air Inlet=Air Outlet=G1/8″ | 进气=出气=排气=G1/2″<br>Air Inlet=Air Outlet=Exhaust =G1/4″ |
| 使用压力范围<br>Working-pressure Range | 0~0.8MPa | | | | | |
| 使用温度范围<br>Operating Temperature Range | 0~60℃ | | | | | |

# 手 扳 阀
Hand-pull Valve

## 外形尺寸 | Overall Dimension

### 4H Series

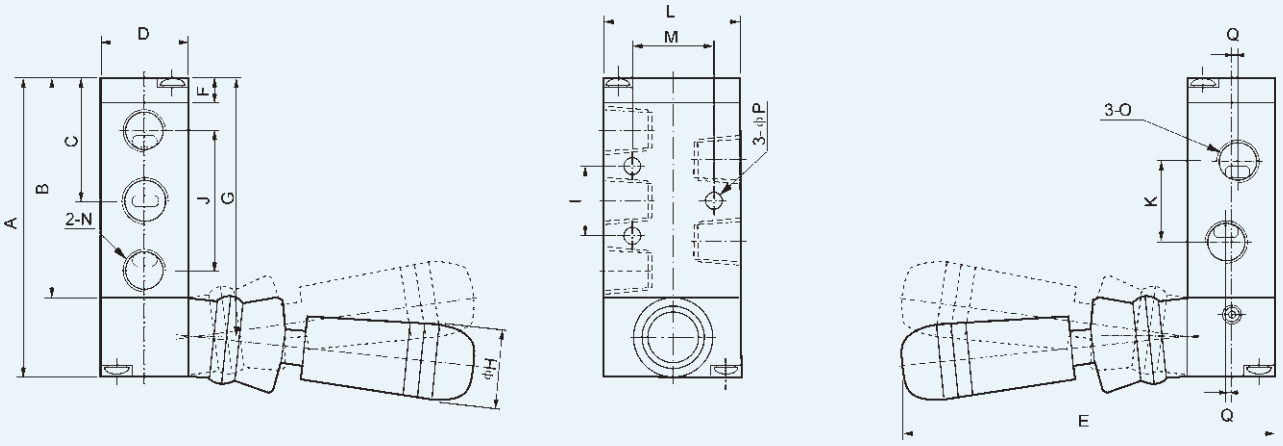


## 尺寸表 | Dimension Sheet

| 符号/型号 Symbol/Model | 4H210-06 | 4H230-06 | 4H230-06（自动复位）(Automatic Reset) | 4H210-08 | 4H230-08L | 4H230-08（自动复位）(Automatic Reset) | 4H310-08 | 4H310-10 | 4H410-15 |
|---|---|---|---|---|---|---|---|---|---|
| A | 76 | | 95 | 76 | | 95 | 92 | 92 | 126 |
| B | 56.5 | | 75.5 | 56.5 | | 75.5 | 72.5 | 72.5 | 102 |
| C | 31.5 | | 31.5 | 31.5 | | 31.5 | 40 | 40 | 55.5 |
| D | 22 | | 22 | 22 | | 22 | 27 | 27 | 34 |
| E | 95 | | 95 | 95 | | 95 | 100 | 100 | 110 |
| F | 6.5 | | 6.5 | 6.5 | | 6.5 | 7.5 | 7.5 | 7.5 |
| G | 66.5 | | 85.5 | 66.5 | | 85.5 | 82.5 | 82.5 | 114 |
| H | 18 | | 18 | 18 | | 18 | 18 | 18 | 18 |
| I | 20 | | 20 | 20 | | 20 | 24 | 24 | 28 |
| J | 36 | | 36 | 36 | | 36 | 45 | 45 | 63 |
| K | 21 | | 21 | 21 | | 21 | 24 | 24 | 36 |
| L | 35 | | 35 | 35 | | 35 | 40 | 40 | 50 |
| M | 21 | | 21 | 21 | | 21 | 27 | 27 | 35 |
| N | G1/8 | | G1/8 | G1/8 | | G1/8 | G1/4 | G1/4 | G1/2 |
| O | G1/8 | | G1/8 | G1/4 | | G1/4 | G1/4 | G3/8 | G1/2 |
| P | 4.3 | | 4.3 | 4.3 | | 4.3 | 4.3 | 4.3 | 5.5 |
| Q | - | | - | 1.5 | | 1.5 | - | 2 | - |

# 手扳阀
Hand Level Valve

## 订购码 | Ordering Code

**TSV86 52 2 – M**

- TSV86 — 规格代码 手扳阀 **Model** Hand Level Valve
- 52 — 位通数 二位五通 **Position and Way NO.** Two-position Five-way
- 2 — 口径代号 **Port size** 1: G1/8″ 2: G1/4″
- M — 形式代号 M:机械锁定式 S:弹簧复位式 **Type Code** M:Machinery Locking Type S:Spring Reset Type

**TSV98 32 2 – M**

- TSV98 — 规格代码 手扳阀 **Model** Hand Level Valve
- 32 — 位通数 二位三通 **Position and Way NO.** Two-position Three-way
- 2 — 口径代号 **Port size** 1: G1/8″ 2: G1/4″
- M — 形式代号 M:机械锁定式 S:弹簧复位式 **Type Code** M:Machinery Locking Type S:Spring Reset Type

## 规格 | Specification

| 型 号 Model | TSV86522 M S | TSV98322 M S |
|---|---|---|
| 工作介质 Working Medium | 经40微米过滤的空气 40 Micron Filtered Air | |
| 动作方式 Motion Pattern | 直动式 Direct Drive Type | |
| 有效截面积 Effective Sectional Area | 18mm$^2$(CV=1.00) | |
| 接口口径 Joint Pipe Bore | G1/4″ | |
| 使用压力范围 Working-pressure Range | 0~0.8MPa | |
| 使用温度范围 Operating Temperature | 0~60℃ | |

## 外形尺寸 | Overall Dimension

### TSV86522

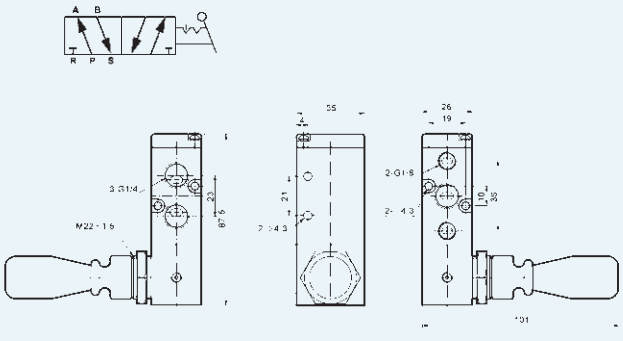

### TSV98322

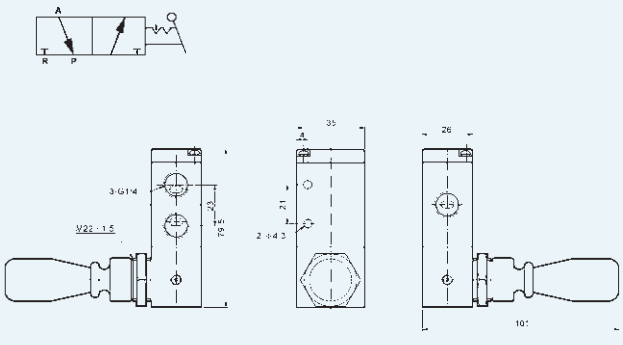

# 手转阀
Hand-switching Valve

## 订购码 | Ordering Code

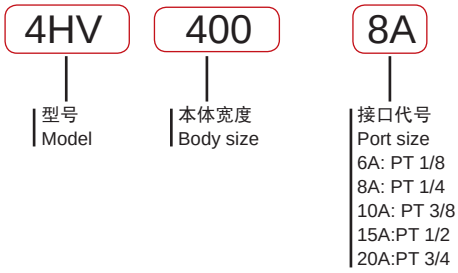


## 图形符号 | Graphic Symbol

## 规格 | Specification

| 型号 Model | 4HV-200 | | 4HV-300 | | | 4HV-400 | | | |
|---|---|---|---|---|---|---|---|---|---|
| 接管口径代号 Joint Pipe Code | 6A | 8A | 8A | 10A | 15A | 8A | 10A | 15A | 20A |
| 使用流体 Operating Fluid | 空气/Air | | | | | | | | |
| 使用压力范围 Working-pressure Range | 0～10Kgf/cm | | | | | | | | |
| 环境温度 Environment Temperature | 5～60℃ | | | | | | | | |
| 方口数 Way NO. | 4 | | | | | | | | |
| 接口口径 Joint Pipe Bore | PT1/8 | PT1/4 | PT1/4 | PT3/8 | PT1/2 | PT1/4 | PT3/8 | PT1/2 | PT3/4 |

## 外形尺寸 | Overall Dimension

**4HV-200**

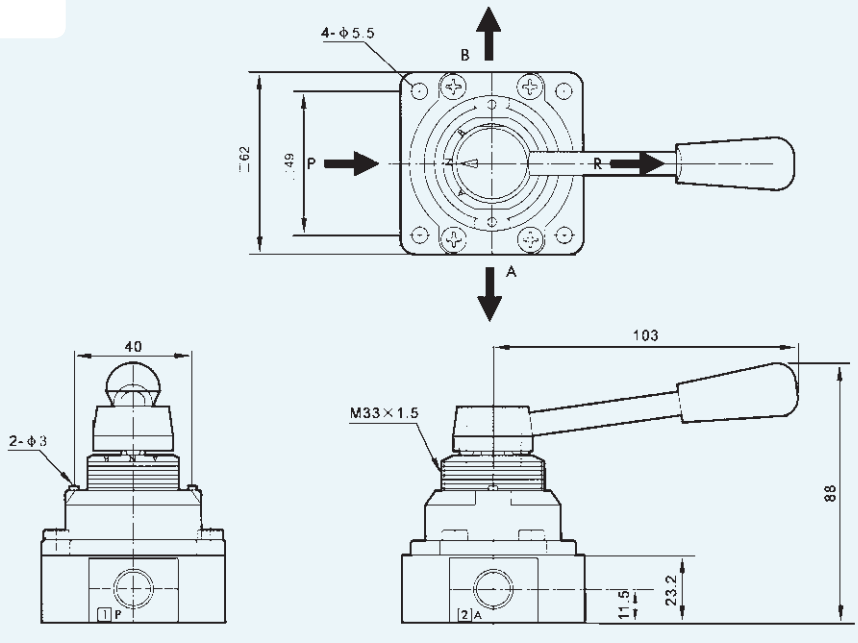


B

# 手拉阀
Hand-draw Valve

## 订购码 | Ordering Code

**4R** — 规格代码
4R: 二位五通手拉阀
3R: 二位三通手拉阀
**Model**
4R:Two-position Five-way Hand-draw Valve
3R: Two-position Three-way Hand-draw Valve

**2** — 系列代号
2:200系列
**Body size**
2: 200 Series

**10** — 位置数
10:单头双位置
**Motion Pattem**
10: Single-head Double-position

**–**

**06** — 接管口径
**Port size**
06: G1/8″
08: G1/4″

## 规格 | Specification

| 型 号 Model | 4R210-06 | 4R210-08 | 3R210-06 | 3R210-08 |
|---|---|---|---|---|
| 工作介质 Working Medium | 经40微米过滤的空气 40 Micron Filtered Air | | | |
| 位通数 Position and Way NO. | 二位五通 Two-position Five-way | | 二位三通 Two-position Three-way | |
| 有效截面积 Effective Section Area | 14mm²(CV=0.78) | 16mm²(CV=0.89) | 14mm²(CV=0.78) | 16mm²(CV=0.89) |
| 接口口径 Joint Pipe Bore | 进气=出气=排气=G1/8″ Air Inlet=Air Outlet=Exhaust=G1/8″ | 进气=出气=G1/4″排气=G1/8″ Air Inlet=Air Outlet=G1/4″ Exhaust=G1/8″ | 进气=出气=排气=G1/8″ Air Inlet=Air Outlet=Exhaust=G1/8 ″ | 进气=出气=排气=G1/4″ Air Inlet=Air Outlet=Exhaust=G1/4″ |
| 使用压力范围 Working-pressure Range | 0~0.8MPa | | | |
| 使用温度范围 Operating Temperature Range | 0~60℃ | | | |

## 外形尺寸 | Overall Dimension

**4R210-08**

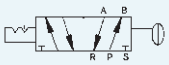


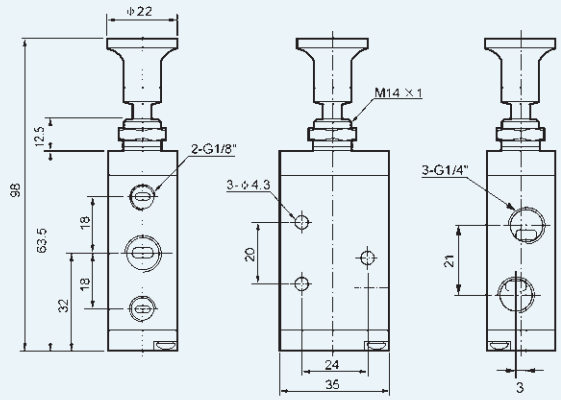


**3R210-08**

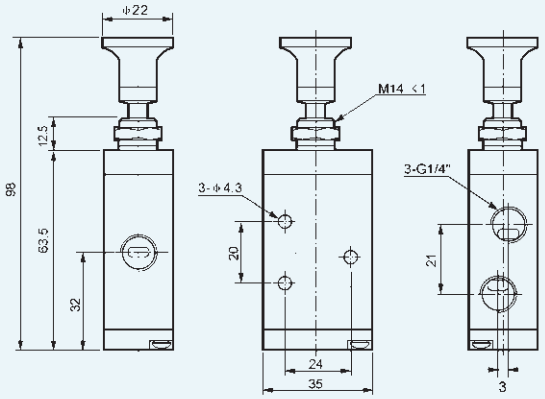

# MV系列手滑阀
MV Series Hand Sliding Valve

## 产品说明 | Product Explain

该阀是一种二位三通手动滑阀，常接在管道中用作气源开关，当气源关闭的同时，气动系统中的气压亦即排空。

This valve is a two-position three-way hand sliding valve,which is usually installed in the piping to turn on/off airs.When it is turned off, the air pressure in the pneumatic system is exhausted simultaneously.

## 订购码 | Ordering Code

**MV** – **03**

- MV：规格代码 Model
- 03：接口代码 Port size
  - 01: G1/8
  - 02: G1/4
  - 03: G3/8
  - 04: G1/2
  - 06: G3/4

## 图形符号 | Graphic Symbol

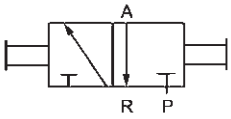


## 规格 | Specification

| 型 号 Model | | MV-01 | MV-02 | MV-03 | MV-04 | MV-06 |
|---|---|---|---|---|---|---|
| 接管口径 | Joint Pipe Bore | G1/8″ | G1/4″ | G3/8″ | G1/2″ | G3/4″ |
| 流量通径 | Flow Bore | 4 mm | 7 mm | 10 mm | 12 mm | 18 mm |
| 工作介质 | Working Medium | 经过滤的压缩空气 / Filtered Air | | | | |
| 工作压力 | Working-pressure | 0 ~ 1.0MPa | | | | |
| 环境温度 | Ambient Temperature | 5 ~ 60℃ | | | | |
| 操作力 | Working Force | 20N | | | | 30N |

## 外形尺寸 | Overall Dimension

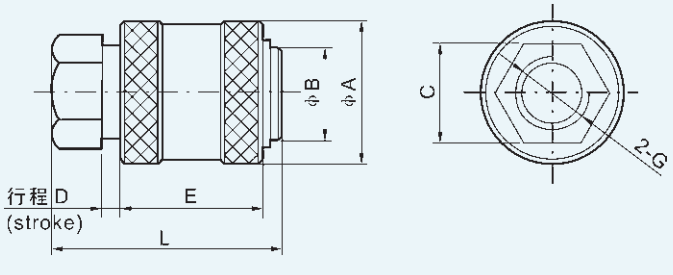


## 尺寸表 | Dimension Sheet

| 型号 /符号 Model / Symbol | A | B | C | D | E | L | G |
|---|---|---|---|---|---|---|---|
| MV-01 | 20 | 13 | 14 | 3 | 20 | 32 | G1/8 |
| MV-02 | 27 | 18 | 19 | 5 | 32 | 48 | G1/4 |
| MV-03 | 30 | 21 | 22 | 5 | 32 | 48 | G3/8 |
| MV-04 | 38 | 24 | 27 | 10 | 40 | 70 | G1/2 |
| MV-06 | 45 | 32 | 34 | 10 | 45 | 75 | G3/4 |

# KA系列单向阀
## KA Series Check Valve

## 产品说明 | Product Explain

该阀是一种单向型方向控制元件，当工作介质通过本阀时，只能沿着一个给定的方向流动。在工作中，如果介质压力方向有变化时，本阀可起截止作用，使系统中介质不能返回，故本产品又叫逆止阀。

The valve is unidirectional control element. When passing the valve, the working medium can only flow along a given direction. In operation, when the medium pressure direction changes, the valve functions to stop the return of the medium in the system. Therefore, the product is also called non-return valve.

## 图形符号 | Graphic Symbol

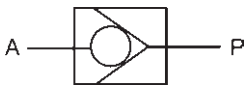


## 规格 | Specification

| 型 号 Model | | KA-3 | KA-6 | KA-8 | KA-10 | KA-15 | KA-20 | KA-25 | KA-32 | KA-40 | KA-50 |
|---|---|---|---|---|---|---|---|---|---|---|---|
| 工作压力 | Working-pressure | 0.05 ~ 0.8MPa | | | | | | | | | |
| 环境温度 | Entironment Temperature | -10 ~ +55℃ | | | | | | | | | |
| 介质温度 | Medium Temperature | 0 ~ +55℃ | | | | | | | | | |
| 流通能力S值($mm^2$) | Circulating Ability | 4 | 10 | 20 | 40 | 60 | 110 | 190 | 300 | 400 | 650 |
| 开启能力 | Startup Ability | ≤ 0.03MPa | | | | | | | | | |
| 泄漏量 ($cm^3$/min) | Leak Out Flow | 30 | 50 | 50 | 120 | 120 | 250 | 250 | 500 | 500 | 500 |
| 响应时间(Sec) | Respond Time | 0.03 | | | | | | | | | |
| 寿命（万次） | Life ( Ten thousand Times) | ≥150 | | | | | | | | | |

## 外形尺寸 | Overall Dimension

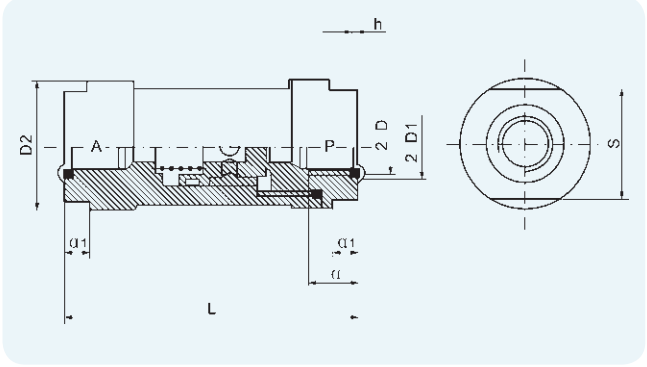


## 尺寸表 | Dimension Sheet

| 型号 Model | 公称通径 Joint Pipe Code | D | D1 | D2 | S | L | a | a1 | h |
|---|---|---|---|---|---|---|---|---|---|
| KA-L3 | 3 | M6×1 | Φ9 | Φ15 | 12 | 36 | 6 | 5 | $1.4^{0}_{-0.1}$ |
| KA-L6 | 6 | G1/8 M10×1 | Φ13 | Φ28 | 24 | 64 | 10 | 6 | $1.4^{0}_{-0.1}$ |
| KA-L8 | 8 | G1/4 M12×1.5 | Φ16 | Φ28 | 24 | 64 | 12 | 6 | $1.4^{0}_{-0.1}$ |
| KA-L10 | 10 | G3/8 M16×1.5 | Φ20 | Φ40 | 36 | 86 | 14 | 10 | $1.8^{0}_{-0.1}$ |
| KA-L15 | 15 | G1/2 M20×1.5 | Φ26 | Φ40 | 36 | 86 | 14 | 10 | $1.8^{0}_{-0.1}$ |
| KA-L20 | 20 | G3/4 M27×2 | Φ32 | Φ55 | 46 | 112 | 21 | 12 | $1.8^{0}_{-0.1}$ |
| KA-L25 | 25 | G1 M33×2 | Φ40 | Φ55 | 46 | 112 | 23 | 12 | $2.7^{0}_{-0.12}$ |
| KA-L32 | 32 | G1 1/4 M42×2 | Φ48 | Φ88 | 75 | 161 | 25 | 22 | $2.7^{0}_{-0.12}$ |
| KA-L40 | 40 | G1 1/2 M48×2 | Φ54 | Φ88 | 75 | 161 | 26 | 26 | $2.7^{0}_{-0.12}$ |
| KA-L50 | 50 | G2 M60×2 | Φ70 | Φ100 | 90 | 95 | 26 | 26 | $4.5^{0}_{-0.18}$ |

# 梭 阀
Shuttle Valve

## 订购码 | Ordering Code

**ST** – **01**

规格代码
ST：梭阀
**Model**
ST: Shuttle Valve

接管口径
**Port size**
01: G1/8″ 04: G1/2″
02: G1/4″ 06: G3/4″
03: G3/8″ 08: G1″

## 图形符号 | Graphic Symbol

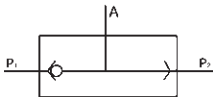


B

## 规格 | Specification

| 型 号 Model | ST-01 | ST-02 | ST-03 | ST-04 | ST-06 | ST-08 |
|---|---|---|---|---|---|---|
| 工作介质 Working Medium | 空气 Air | | | | | |
| 有效截面积 Effective Sectional Area | 7.5mm² | 21mm² | 40mm² | 60mm² | 110mm² | 190mm² |
| 接管口径 Joint Pipe Bore | G1/8″ | G1/4″ | G3/8″ | G1/2″ | G3/4″ | G1″ |
| 使用压力范围 Working-pressure Range | 0~1.0MPa | | | | | |
| 使用温度范围 Operating Temperature | 0~60℃ | | | | | |

## 外形尺寸 | Overall Dimension

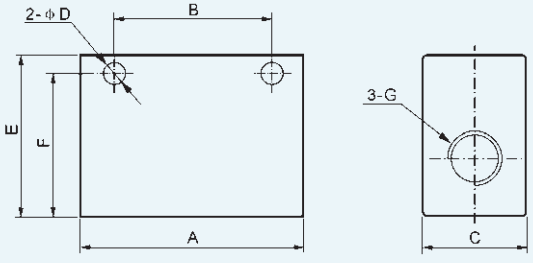


## 尺寸表 | Dimension Sheet

| 型 号 Model | A | B | C | D | E | F | G |
|---|---|---|---|---|---|---|---|
| ST-01 | 40 | 24 | 16 | 4.5 | 25 | 20.5 | G1/8″ |
| ST-02 | 50 | 35 | 22 | 5.5 | 35 | 25 | G1/4″ |
| ST-03 | 75 | 48 | 30 | 7 | 50 | 42 | G3/8″ |
| ST-04 | 75 | 48 | 30 | 7 | 50 | 42 | G1/2″ |
| ST-06 | 110 | 72 | 40 | 7 | 70 | 58 | G3/4″ |
| ST-08 | 110 | 72 | 40 | 7 | 70 | 58 | G1″ |

# 快速排气阀
Quick Exhaust Valve

## 订购码 | Ordering Code

**QE** – **01**

规格代码
QE：快速排气阀
**Model**
QE: Quick Exhaust Valve

接管口径
**Port size**
01: G1/8″
02: G1/4″
03: G3/8″
04: G1/2″
06: G3/4″

## 图形符号 | Graphic Symbol

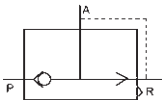


## 规格 | Specification

| 型 号 Model | QE-01 | QE-02 | QE-03 | QE-04 | QE-06 |
|---|---|---|---|---|---|
| 工作介质 Working Medium | 空气 Air | | | | |
| 有效截面积 Effective Sectional Area | 16mm² | 27.5mm² | 28mm² | 71mm² | 72.5mm² |
| 接管口径 Joint Pipe Bore | G1/8″ | G1/4″ | G3/8″ | G1/2″ | G3/4″ |
| 使用压力范围 Working-pressure Range | 0~0.8MPa | | | | |
| 使用温度范围 Operating Temperature | 0~60℃ | | | | |

## 外形尺寸 | Overall Dimension

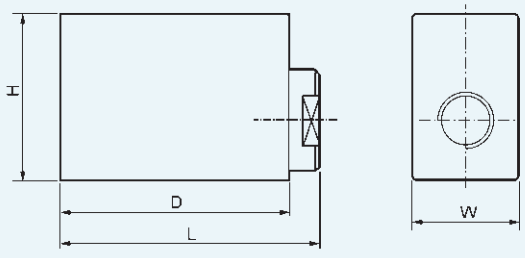


## 尺寸表 | Dimension Sheet

| 型 号 Model | 口径 Bore | L | W | H | D |
|---|---|---|---|---|---|
| QE-01 | G1/8 | 39 | 18 | 27 | 35 |
| QE-02 | G1/4 | 54 | 28 | 36 | 50 |
| QE-03 | G3/8 | 54 | 28 | 36 | 50 |
| QE-04 | G1/2 | 66 | 28 | 36 | 50 |

# AQ系列快速排气阀
AQ Series Quick Exhaust Valve

## 订购码 | Ordering Code

AQ – 01

规格代码
AQ：快速排气阀
**Model**
AQ: Quick Exhaust Valve

接管口径
**Port size**
01: G1/8″
02: G1/4″
03: G3/8″
04: G1/2″
06: G3/4″

B

# XQ系列快速排气阀
XQ Series Quick Exhaust Valve

## 订购码 | Ordering Code

XQ – 01

规格代码
XQ：快速排气阀
**Model**
XQ: Quick Exhaust Valve

接管口径
**Port size**
01: G1/8″
02: G1/4″
03: G3/8″
04: G1/2″

# KLA系列单向节流阀
KLA Series Flow control valve

## 订购码 | Ordering Code

KLA - 10

KLA
规格代码
KLA:单向节流阀
**Model**
KLA: Check Valve

10
接管口径
**Port size**
06: G1/8 08: G1/4
10: G3/8 15: G1/2

## 图形符号 | Graphic Symbol

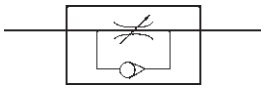

## 规格 | Specification

| 型 号 Model | | KLA-06 | KLA-08 | KLA-10 | KLA-15 |
|---|---|---|---|---|---|
| 工作介质 Working Medium | | 空 气 / Air | | | |
| 接管口径 Joint Pipe Bore | | G1/8 | G1/4 | G3/8 | G1/2 |
| 使用压力范围 Working-pressure Range | | 0.5~9.5 Kgf/cm$^2$ | | | |
| 保证耐压力 Ensured Pressure Resistance | | 15.0 Kgf/cm$^2$ | | | |
| 使用温度范围 Operating Temperature Range | | -5~60℃ | | | |
| 本体材质 Body of Material | | 铝合金 LY12 / Aluminum Alloy LY12 | | | |
| 标准额定流量 (L/min) Standard Rated Flow | 节流阀 Check Valve | 200 | 450 | 1250 | 1650 |
| | 单向阀 One-way Valve | 400 | 800 | 1500 | 2000 |

## 流量与调节螺纹转数的关系 Flow & Adjust Screw Thread Turn No. Nexus

KLA-06
KLA-08

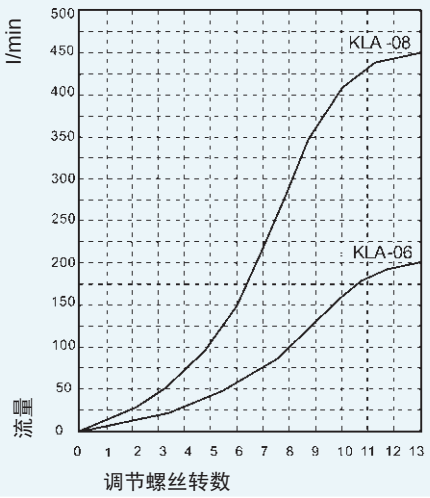


KLA-10
KLA-15

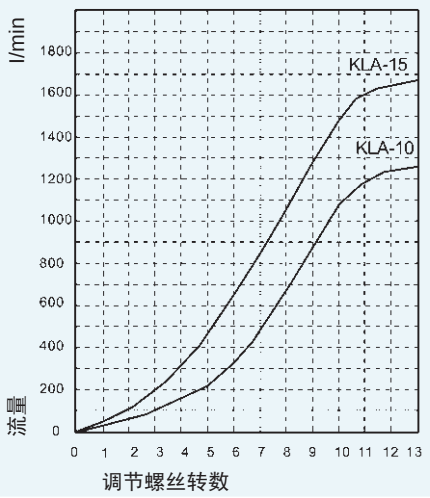

# KLA系列单向节流阀
KLA Series Flow control valve

## 外形尺寸 | Overall Dimension

KLA-06

KLA-08

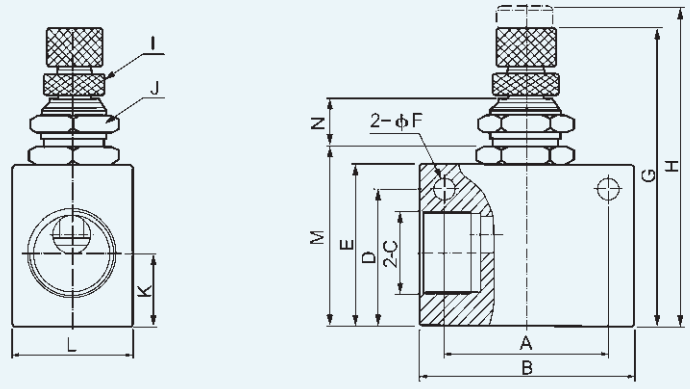


## 尺寸表 | Dimension Sheet

| 型号 /符号 Model / Symbol | A | B | C | D | E | F | G | H | I | J | K | L | M | N |
|---|---|---|---|---|---|---|---|---|---|---|---|---|---|---|
| KLA-06 | 22 | 32 | PT1/8 | 18 | 23 | 4.3 | 46.8 | 52.3 | M6×0.5 | M12×0.75 | 10 | 18 | 26 | 8.6 |
| KLA-08 | 26 | 36 | PT1/4 | 23 | 27 | 4.3 | 50.8 | 56.3 | M6×0.5 | M12×0.75 | 13.5 | 18 | 30 | 8.6 |

## 外形尺寸 | Overall Dimension

KLA-10 ~ KLA-15

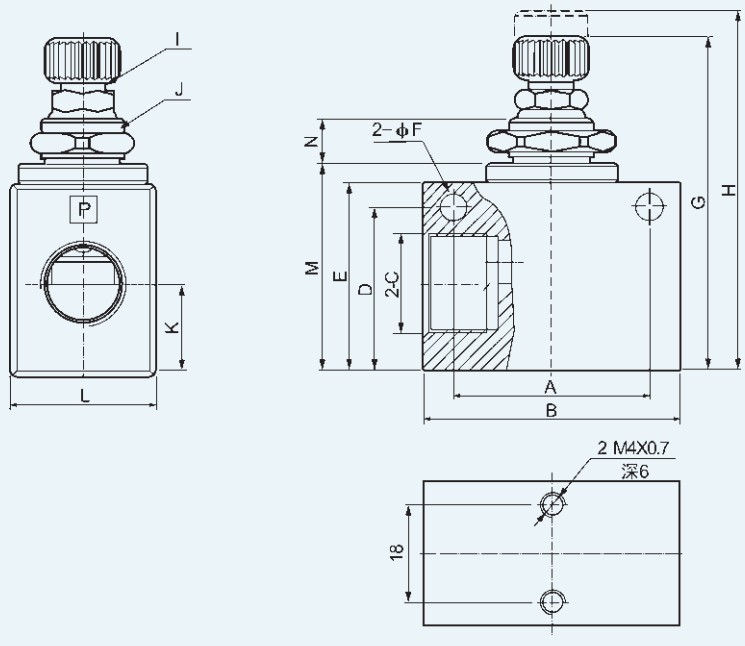


## 尺寸表 | Dimension Sheet

| 型号 / 符号 Model / Symbol | A | B | C | D | E | F | G | H | I | J | K | L | M | N |
|---|---|---|---|---|---|---|---|---|---|---|---|---|---|---|
| KLA-10 | 35 | 50 | G3/8 | 32 | 37 | 5.3 | 65 | 74 | M8×0.75 | M16 ×1 | 17.5 | 28 | 40.5 | 10.2 |
| KLA-15 | 35 | 50 | G1/2 | 32 | 37 | 5.3 | 65 | 74 | M8×0.75 | M16 ×1 | 17.5 | 28 | 40.5 | 10.2 |

# 流量控制阀
ASC series Flow Control Valve

ASC

## 订购码 | Ordering Code

**ASC** – **08**

规格代码
ASC：精密型流量控制阀
**Model**
ASC: Flow Control Valve (accurate)

接管口径
**Port size**
06: G1/8″
08: G1/4″
10: G3/8″
15: G1/2″

**RE** – **01**

规格代码
RE：普通型流量控制阀
**Model**
RE: Flow Control Valve

接管口径
**Port size**
01: G1/8″
02: G1/4″
03: G3/8″
04: G1/2″

## 图形符号 | Graphic Symbol

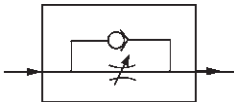

## 规格 | Specification

| 型 号 Model | 精 密 型 Accurate Type | | | | 普 通 型 Ordinary Type | | | |
|---|---|---|---|---|---|---|---|---|
| | ASC-06 | ASC-08 | ASC-10 | ASC-15 | RE-01 | RE-02 | RE-03 | RE-04 |
| 工作介质 Working Medium | G1/8″ | G1/4″ | G3/8″ | G1/2″ | G1/8″ | G1/4″ | G3/8″ | G1/2″ |
| 接管口径 Joint Pipe Bore | 空气 Air | | | | | | | |
| 使用压力范围 Working-pressure Range | 0~0.95MPa | | | | | | | |
| 使用温度范围 Operating Temperature | 0~60℃ | | | | | | | |

# 流量控制阀
Flow Control Valve

## 外形尺寸 | Overall Dimension

### ASC Series

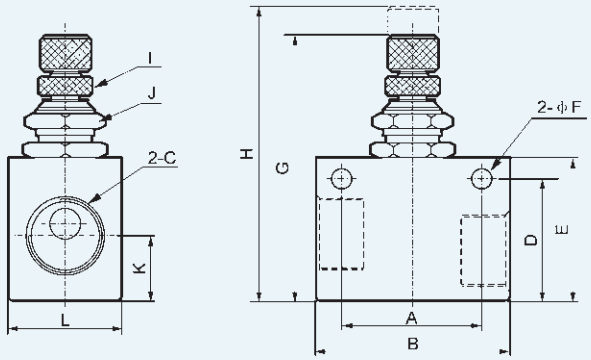


## 尺寸表 | Dimension Sheet

| 型号 /符号 Model / symbol | A | B | C | D | E | F | G | H | I | J | K | L |
|---|---|---|---|---|---|---|---|---|---|---|---|---|
| ASC-06 | 22 | 32 | G1/8 | 22 | 27 | 4.3 | 49.7 | 56.5 | M6×0.5 | M12×0.75 | 12 | 18 |
| ASC-08 | 26 | 36 | G1/4 | 22 | 27 | 4.3 | 49.7 | 56.5 | M6×0.5 | M12×0.75 | 12 | 18 |
| ASC-10 | 28 | 40 | G3/8 | 25 | 30 | 4.3 | 52.7 | 59.5 | M6×0.5 | M12×0.75 | 13 | 22 |
| ASC-15 | 28 | 40 | G1/2 | 30 | 35 | 4.3 | 58.7 | 65.5 | M6×0.5 | M12×0.75 | 13.5 | 26 |

## 外形尺寸 | Overall Dimension

### RE Series

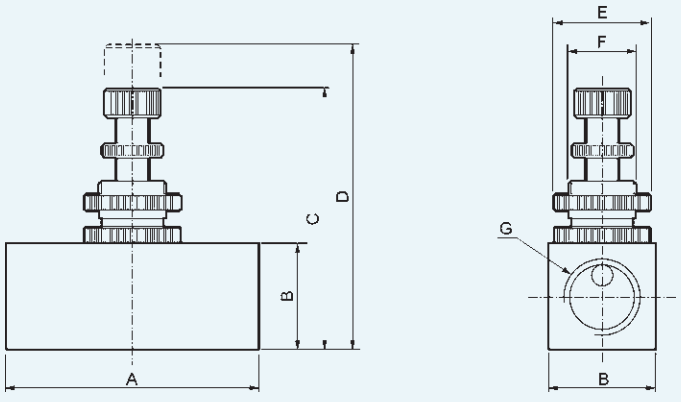


## 尺寸表 | Dimension Sheet

| 型号 /符号 Model / symbol | A | B | C | D | E | F | G |
|---|---|---|---|---|---|---|---|
| RE-01 | 45 | 19 | 43 | 50 | Φ19 | M14×1 | G1/8 |
| RE-02 | 45 | 19 | 43 | 50 | Φ19 | M14×1 | G1/4 |
| RE-03 | 55 | 25 | 55 | 62 | Φ25 | M18×1 | G3/8 |
| RE-04 | 55 | 25 | 55 | 62 | Φ25 | M18×1 | G1/2 |

# 2V系列二位二通电磁阀
## 2V Series Two-position Two-way Solenoid Valve

## 订购码 | Ordering Code

**2V**
规格代码
2V:二位二通电磁阀
**Specification Code**
2V: Two-position Two-way Solenoid Valve

**025**
流量孔径
**Aperture of Flow Rate**
025: 2.5mm
130: 13mm
250: 25mm

**30**
接管口径
**Joint Pipe Bore**
06: 1/8″ 08: 1/4″
10: 3/8″ 15: 1/2″
20: 3/4″ 25: 1″

**AC220V**
标准电压
**Standard Voltage**
DC12V
DC24V
AC24V 50Hz/60Hz
AC110V 50Hz/60Hz
AC220V 50Hz/60Hz
AC380V 50Hz/60Hz

## 图形符号 | Graphic Symbol

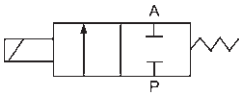


## 规格 | Specification

| 型 号 Model | 2V025-06 | 2V025-08 | 2V130-10 | 2V130-15 | 2V250-20 | 2V250-25 |
|---|---|---|---|---|---|---|
| 工作介质 Working Medium | 空气、水、油 Air, Water, Oil | | | | | |
| 动作方式 Motion Pattern | 直动式 Direct Drive Type | | 先导式 Guide Type | | | |
| 型式 Type | 常闭型 Normal Close Type | | | | | |
| 流量孔径 mm Aperture of Flow Rate | 2.5 | | 13 | | 25 | |
| CV值 CV Value | 0.23 | | 6.2 | | 23 | |
| 接管口径 Joint Pipe Bore | 1/8″ | 1/4″ | 3/8″ | 1/4″ | 3/4″ | 1″ |
| 使用流体粘滞度 Operation Fluid Viscosity | 20 CST以下 (Below) | | | | | |
| 使用压力 Working-pressure | 空气Air, 水Water, 油Oil: 0~1.0MPa | | 空气Air, 水Water, 油Oil: 0.05~0.7MPa | | | |
| 最大耐压力 Max. Pressure Resistance | 1.5MPa | | 1.05MPa | | | |
| 工作温度范围 Operating Temperature Range | -10~+80℃ | | | | | |
| 使用电压范围 Voltage Range | ±10% | | | | | |
| 保护等级 Protect Class | IP65 | | | | | |
| 耗电量 Power Consumption | AC:7VA/60Hz, 9VA/50Hz ; DC:6W | | | | | |
| 绝缘性 Insulation | F级 F Class | | | | | |
| 本体材质 Material of Body | 铝或铜 Aluminum or Brass | | 黄 铜 Brass | | | |
| 油封材质 Material of Oil Seal | NBR或VITON / NBR or VITON | | NBR | | | |
| 最短励磁时间 Shortest Excitation Time | 0.05秒 / Second | | | | | |

x特殊电压及特殊规格请与厂方接洽 Please contact Factory for special voltage and Specification.

# 2V系列二位二通电磁阀
2V Series Two-position Two-way Solenoid Valve

## 外形尺寸 | Overall Dimension

**2V010-M4**

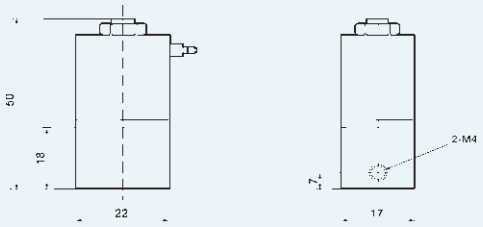


**2V025-06**

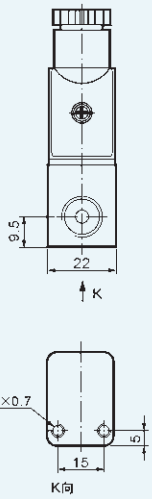


**2V025-08**

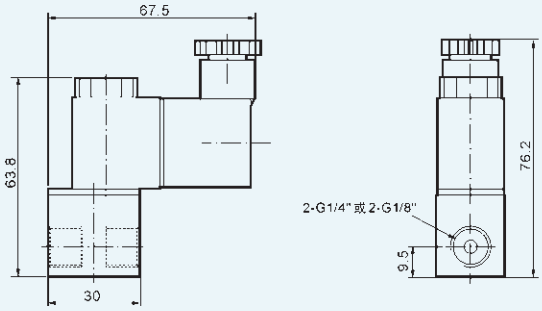


**2V130-10**

**2V130-15**

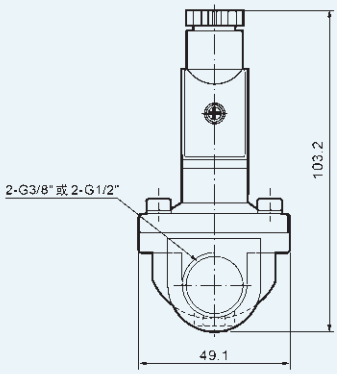


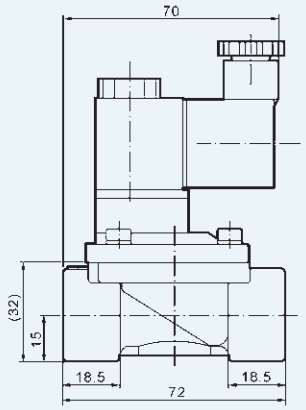


**2V250-20**

**2V250-25**

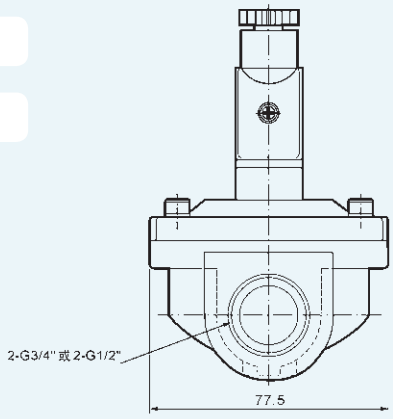


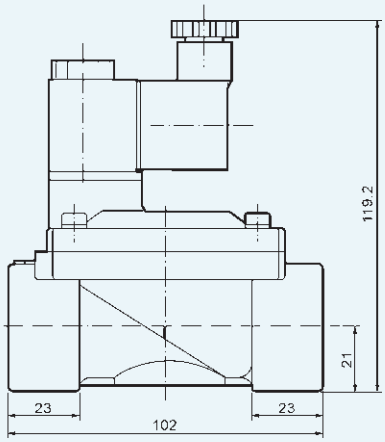


B

# 2Q系列气控二通阀
## 2Q Series Air Control Two-Way Valve

## 订购码 | Ordering Code

**2Q** – **200** – **25**

规格代码
**Specification Code**
2Q:二位二通气控阀
2Q:Two-position Two-way Air Control Valve

流量孔径
**Aperture of Flow Rate**
200:22mm
350:35mm
500:50mm

接管口径
**Joint Pipe Bore**
25: 1″
40: $1\frac{1}{2}$″
50: 2″

## 图形符号 Graphic Symbol

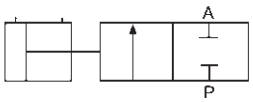


## 规格 | Specification

| 型 号 Model | 2Q200-25 | 2Q350-40 | 2Q500-50 |
|---|---|---|---|
| 工作介质 Working Medium | 空气、水、油、瓦斯 Air, Water, Oil, Gas | | |
| 动作方式 Motion Pattern | 直动式 Direct Drive Type | | |
| 流量孔径 mm Aperture of Flow Rate | 22 | 35 | 50 |
| CV值 CV Value | 12 | 24 | 48 |
| 接管口径 Joint Pipe Bore | G1″ | G$1\frac{1}{2}$″ | G2″ |
| 使用介质粘滞度 Operation Fluid Viscosity | 50 CST以下 (Below) | | |
| 使用压力范围 Working Pressure Rang | 0~0.7MPa | | |
| 最大耐压力 Max. Pressure Resistance | 1.05MPa | | |
| 控制压力范围 Control Pressure Rang | 0.3~0.6MPa | | |
| 工作温度范围 Operating Temperature Rang | -5~+100℃ | | |
| 本体材质 Material of Body | 黄铜 Brass | | |
| 油封材质 Material of Oil Seal | 聚四氟乙烯 PTFE | | |
| 控制接管口径 Control Joint Pipe Bore | 2-G1/8″ | 2-G1/4″ | 2-G1/4″ |

x特殊电压及特殊规格请与厂方接洽 Please contact Factory for special voltage and Specification.

## 外形尺寸 | Overall Dimension

### 2Q Series

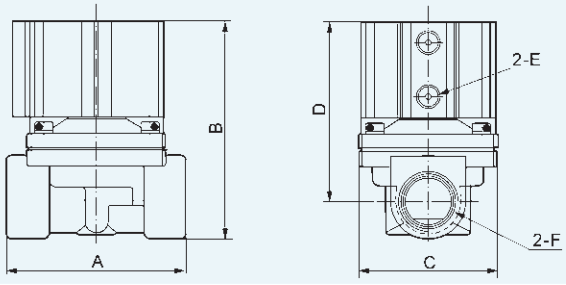


## 尺寸表 | Dimension Sheet

| 型 号 Model | A | B | C | D | E | F |
|---|---|---|---|---|---|---|
| 2Q-25 | 99 | 116 | 57 | 95 | G1/8″ | G1″ |
| 2Q-40 | 123 | 146 | 95 | 116 | G1/4″ | G$1\frac{1}{2}$″ |
| 2Q-50 | 170 | 155 | 118 | 114 | G1/4″ | G2″ |

# VX系列二位二通电磁阀
VX Series Two-position Two-way Solenoid Valve

## 订购码 | Ordering Code

**VX2120** – **08** – **AC220V**

- **VX2120**: 规格代码 **Specification Code**
- **08**: 接管口径 **Joint Pipe Bore**
  - 06: 1/8″
  - 08: 1/4″
  - 10: 3/8″
  - 15: 1/2″
- **AC220V**: 标准电压 **Standard Voltage**
  - DC12V DC24V
  - AC24V 50/60Hz
  - AC36V 50/60Hz
  - AC110V 50/60Hz
  - AC220V 50/60Hz
  - AC380V 50/60Hz

## 图形符号 Graphic Symbol

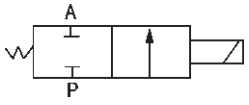


## 规格 | Specification

| 型 号 Model | VX2120-06 | VX2120-08 | VX2120-10 | VX2120-15 |
|---|---|---|---|---|
| 工作介质 Working Medium | 空气、水、蒸汽 Air, Water, Steam | | | |
| 动作方式 Motion Pattern | 直动式 Direct Drive Type | | | |
| 型式 Type | 常闭型 Normal Close Type | | | |
| 流量孔径 mm Aperture of Flow Rate | 3 | | 13 | |
| 接管口径 Joint Pipe Bore | G1/8″ | G1/4″ | G3/8″ | G1/2″ |
| 使用压力 Working-pressure | 0~1.0MPa | | | |
| 使用温度范围 Operation Temperature Range | -5~+150℃ | | -5~+80℃ | |
| 油封材质 Material of Oil Seal | VITON | | NBR | |

x特殊电压及特殊规格请与厂方接洽 Please contact Factory for special voltage and Specification.

## 外形尺寸 | Overall Dimension

**VX Series**

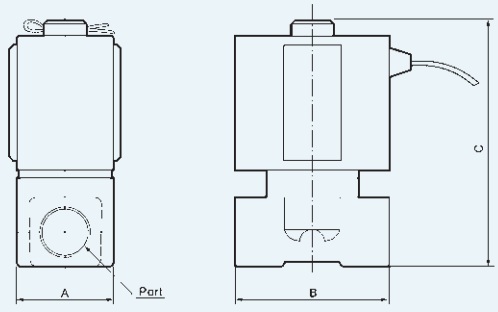


## 尺寸表 | Dimension Sheet

| 型 号 Model | 口径 Bore | A | B | C |
|---|---|---|---|---|
| VX2120-06 | 1/8 | 25 | 40 | 64 |
| VX2120-08 | 1/4 | 25 | 40 | 64 |
| VX2120-10 | 3/8 | 48 | 68 | 110 |
| VX2120-15 | 1/2 | 48 | 68 | 110 |

# Q22HD系列流体气控制阀
Q22HD Series Fluid Air Control Valve

## 订购码 | Ordering Code

| Q | 22 | HD | □ | – | □ | – | □ |
|---|---|---|---|---|---|---|---|
| 规格代码 **Specification Code** Q:气动 Q:Pneumatic | 二位二通 **Two-position Two-way** | 流体气控阀 **Liquid Air Control** | 空白：双作用 1:单作用 Blank: Double Action 1: Single Action | | 公称通径 **Joint Pipe Bore** | | 空白：截止式 B:闸板式 Blank: Stop Type Omitted B: Indicates Flashboard Type |

## 图形符号
Graphic Symbol

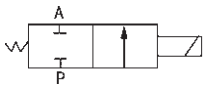


## 规格 | Specification

| 型 号 Model | Q22HD-15 | Q22HD-20 | Q22HD-25 | Q22HD-35 | Q22HD-40 | Q22HD-50 |
|---|---|---|---|---|---|---|
| 公称通径 Bore | 15 | 20 | 25 | 35 | 40 | 50 |
| 接管螺纹 Joint Pipe Bore | G1/2″ | G3/4″ | G1″ | G1 1/4″ | G1 1/2″ | G2″ |
| 工作介质 Working Medium | 空气、水、油、液化气、轻动粘度液体 Air, Water, Oil, Gas,Free-runing viscosity liquid | | | | | |
| 工作压力 Working-pressure | 0.2~0.6MPa | | | | | |
| 介质和环境温度 Temperature of Medium & Condition | 5~50℃ | | | | | |
| 流量系数KV值 Flow Coefficient KV Value | 4 | 5 | 10 | 25 | | 40 |

## 外形尺寸 | Overall Dimension

### Q22HD Series

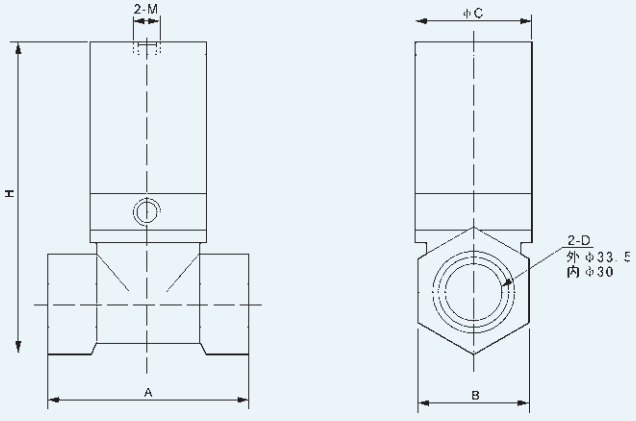


## 尺寸表 | Dimension Sheet

| 型 号 Model | A | B | C | D | H | M |
|---|---|---|---|---|---|---|
| Q22HD-15 | 46 | 26 | Φ30 | G1/2″ | 96 | G1/8″ |
| Q22HD-20 | 54 | 32 | Φ37 | G3/4″ | 107 | G1/8″ |
| Q22HD-25 | 66 | 34 | Φ37 | G1″ | 118 | G1/8″ |
| Q22HD-35 | 80 | 53 | Φ65 | G1 1/4 | 162 | G1/8″ |
| Q22HD-40 | 80 | 53.6 | Φ65 | G1 1/2″ | 162 | G1/8″ |
| Q22HD-50 | 105 | 66 | Φ78 | G2″ | 180 | G1/4″ |

宁波佩斯气动有限公司
NINGBO PACE PNEUMATICS CO.,LTD.
ADD: AnXing Road, ZhangQi Town, CiXi City, ZheJiang Province, China.
P.C : 315300
TEL: 0086-153-8194-5096
FAX: 0086-574-8724-5124
E-mail: pace@china-pace.com
Web: www.pace-pneumatics.com